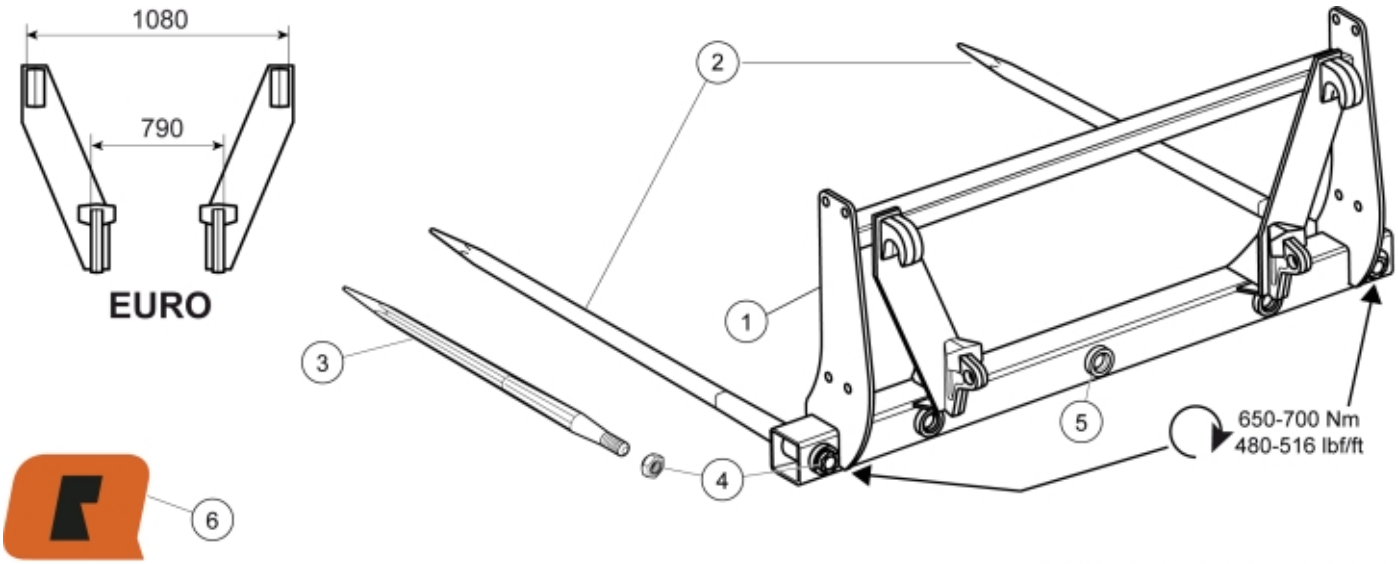

M 11251577, 11251578, 11256323

© 2025 Jost

Description	Tine length 827 mm
Part assemblies	Bale fork M 140 Euro
Specification	Year From: 1/1/2003 12:00:00 AM

PartNo	Pos	Qty	Name	Specifications
11251577			Bale Fork	Euro
11251570	1	1 PCS	Frame	Euro
5068114-17	3	2	Tine with nut	L=827mm (replaces 5068003)
5068116	4	1	• Nut	Conus 2
1209699	5	2	Sleeve	
60049053	6	2	Decal	"Q" small 80x57

© 2025 Jost