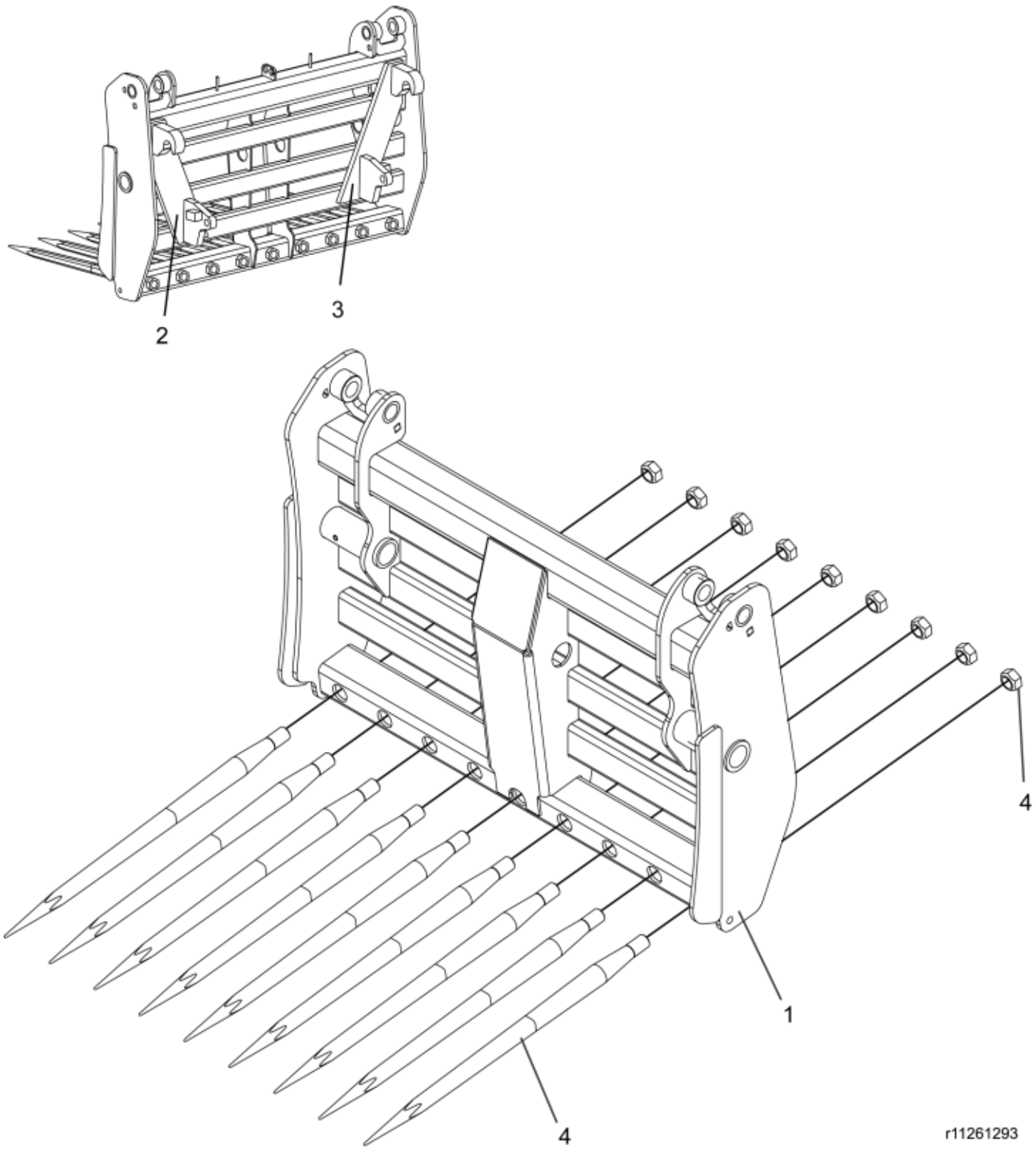

© 2025 Jost

Part assemblies Frame

PartNo	Pos	Qty	Name	Specifications
4500331-17	1	1 PCS	Frame, without tines	
830556	2	1	• Implement hook LH	Euro
830557	3	1	• Implement hook RH	Euro
5068114-17	4	9	Tine with nut	L=827mm (replaces 5068003)

© 2025 Jost