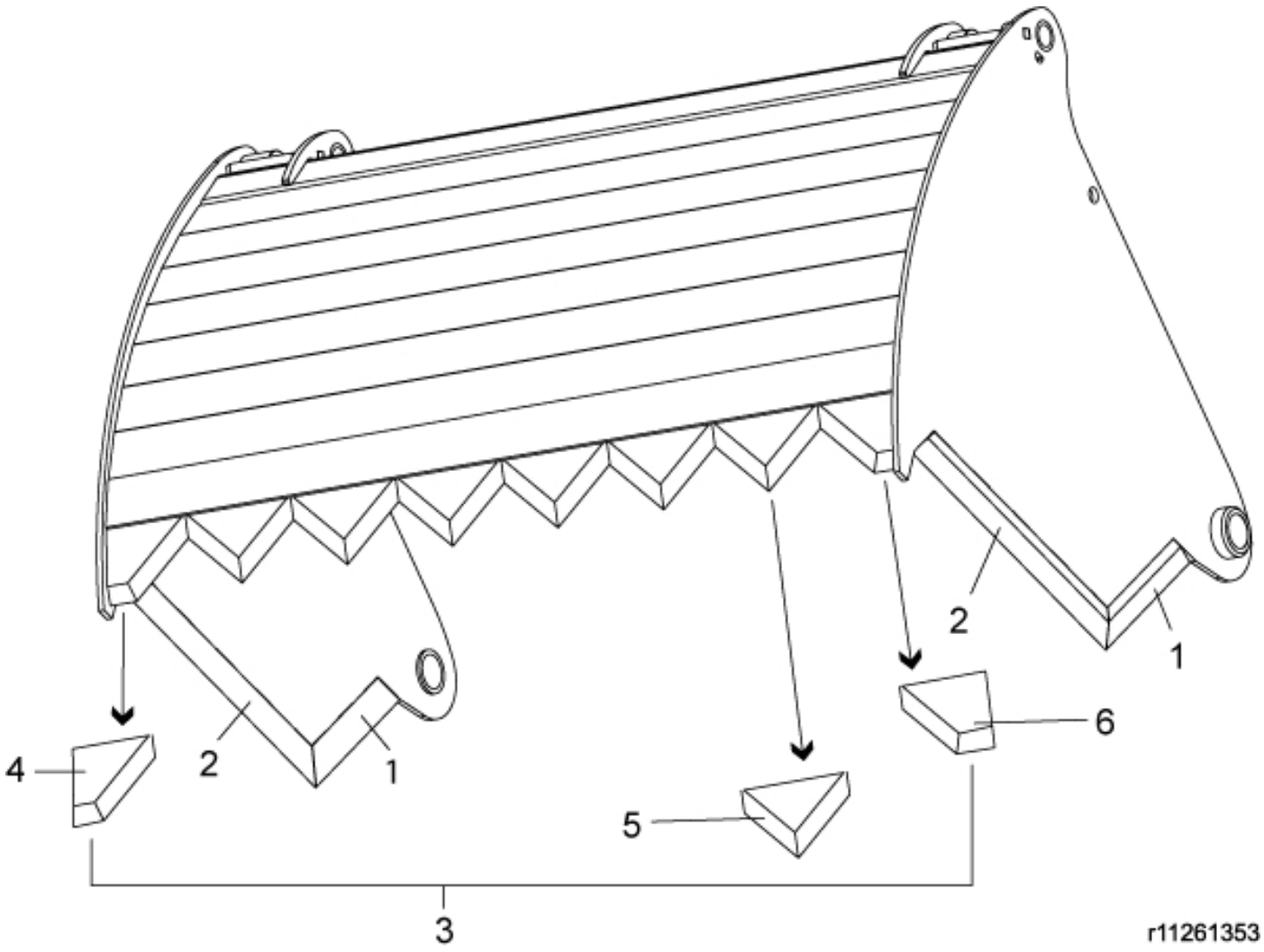

© 2025 Jost

Part assemblies Jaw

PartNo	Pos	Qty	Name	Specifications
11261263	1	2	Cutting edge	
11261265	2	2	Cutting edge	
11261378	3	1 PCS	Front knife	
11261328	4	1 PCS	• Corner Knife LH	
11261329	5	6 PCS	• Centre Knife	
11261327	6	1 PCS	• Corner Knife RH	

© 2025 Jost