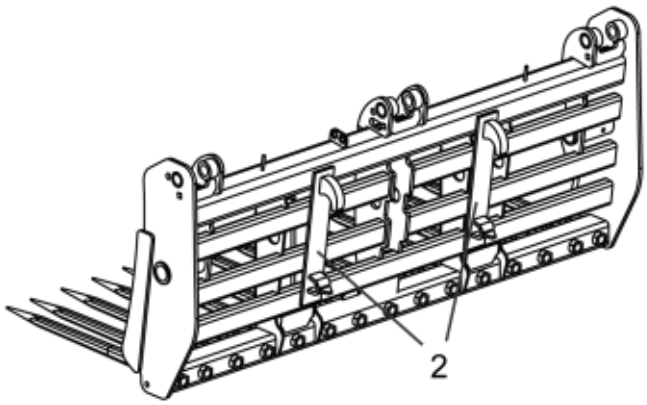

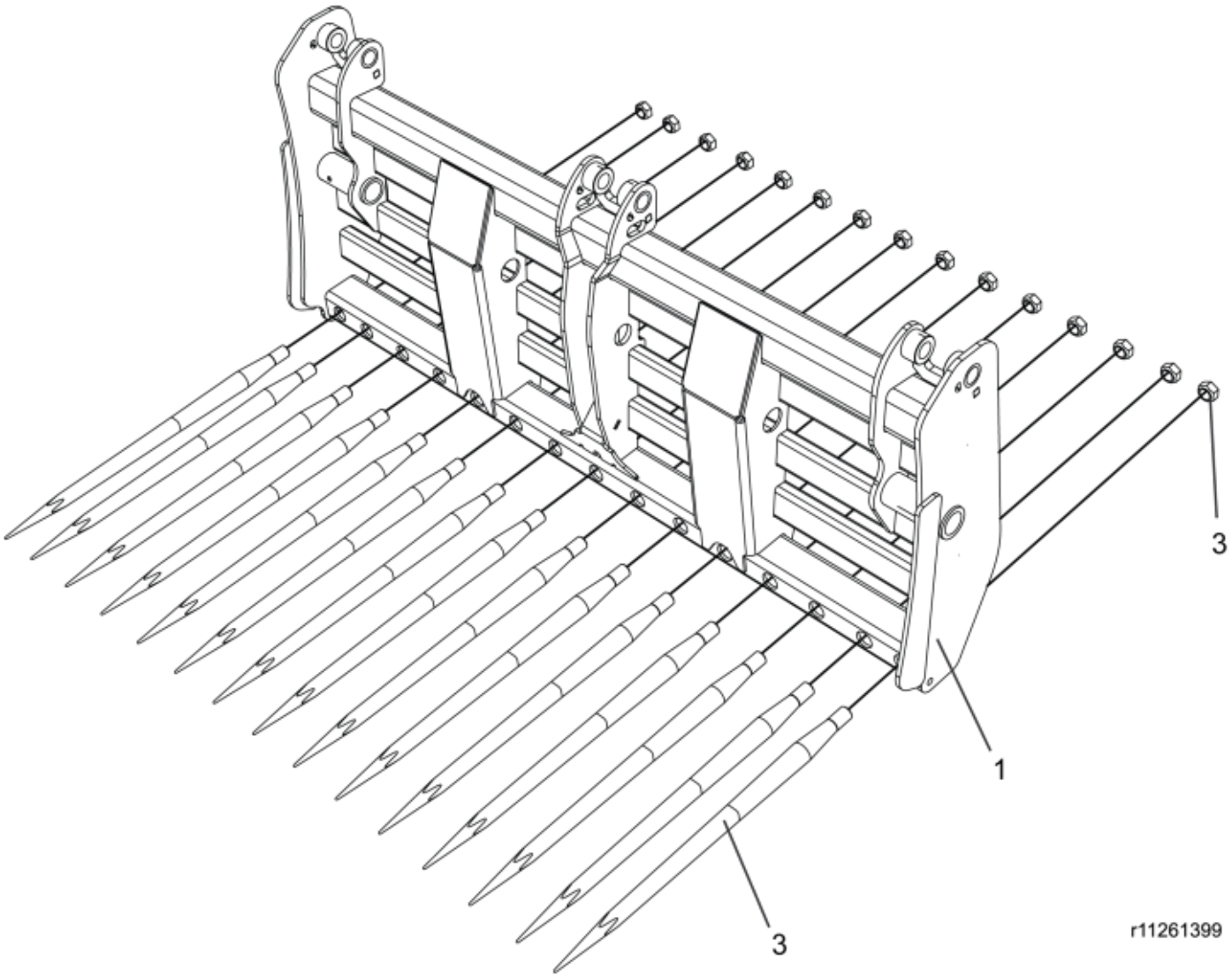

© 2025 Jost

Part assemblies Frame

PartNo	Pos	Qty	Name	Specifications
4500336-17	1	1 PCS	Frame, without tines	
830437	2	2 PCS	• Implement hook	SMS
5068114-17	3	15	Tine with nut	L=827mm (replaces 5068003)

© 2025 Jost