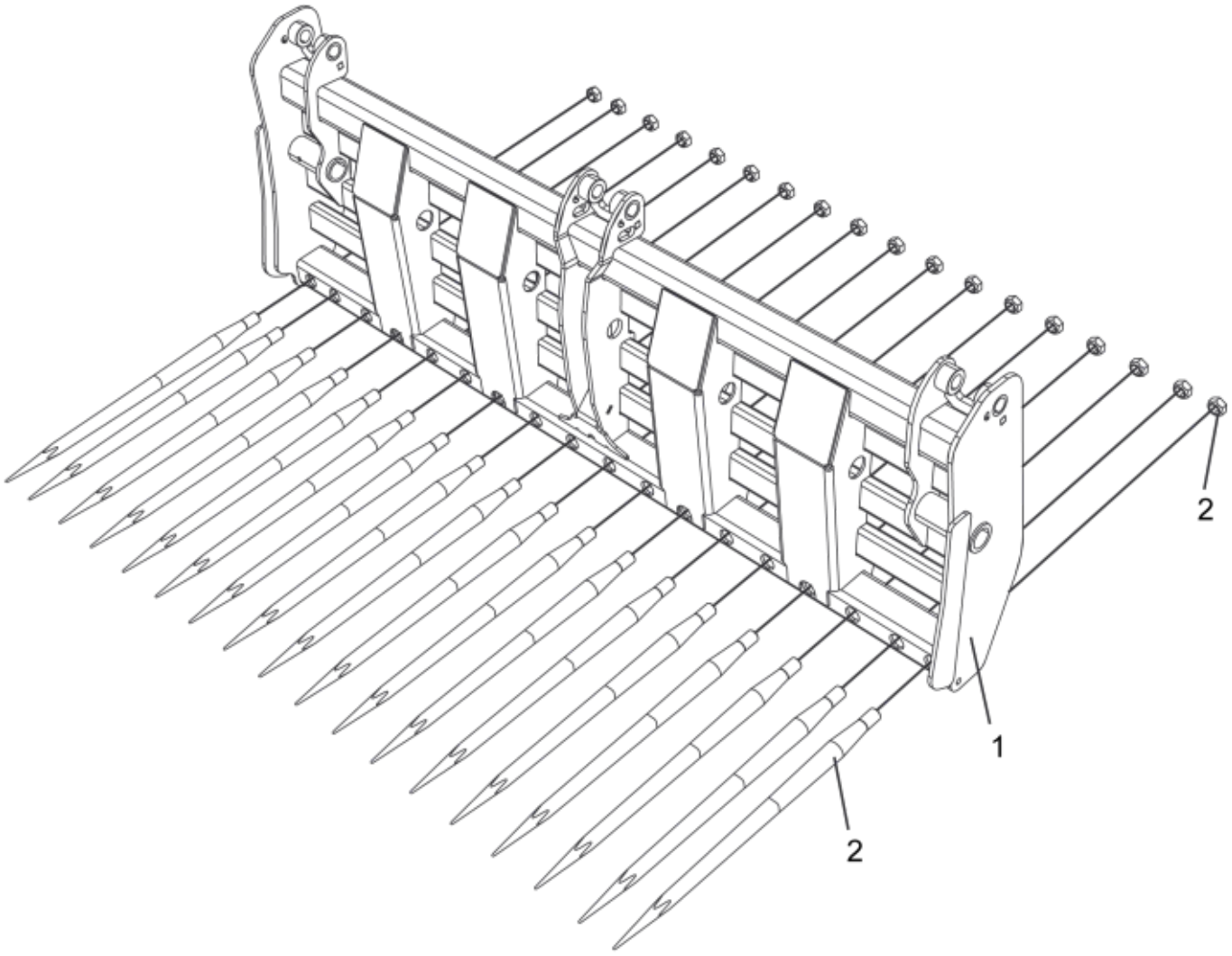

r11261402

© 2025 Jost

Part assemblies Frame

PartNo	Pos	Qty	Name	Specifications
4500339-17	1	1 PCS	Frame, without tines	
5068114-17	2	18	Tine with nut	L=827mm (replaces 5068003)

© 2025 Jost