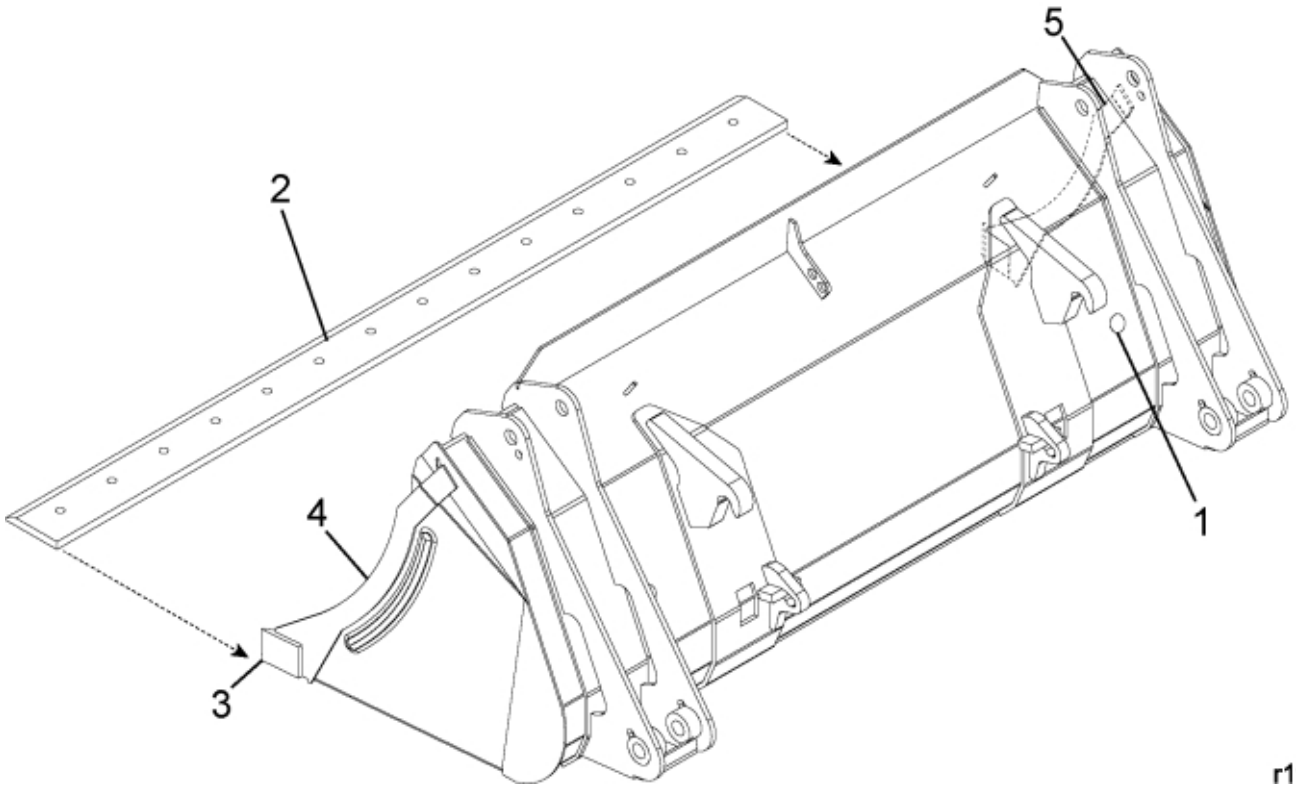

r11261432

© 2025 Jost

Part assemblies Bucket

PartNo	Pos	Qty	Name	Specifications
5022119	1	2	Plug	
60015010	2	1 PCS	Bolt-on cutting edge	2150mm
11261438	3	2	Cutting edge	L=80
11261467	4	1 PCS	Stiffening Plate LH	
11261468	5	1 PCS	Stiffening Plate RH	

© 2025 Jost