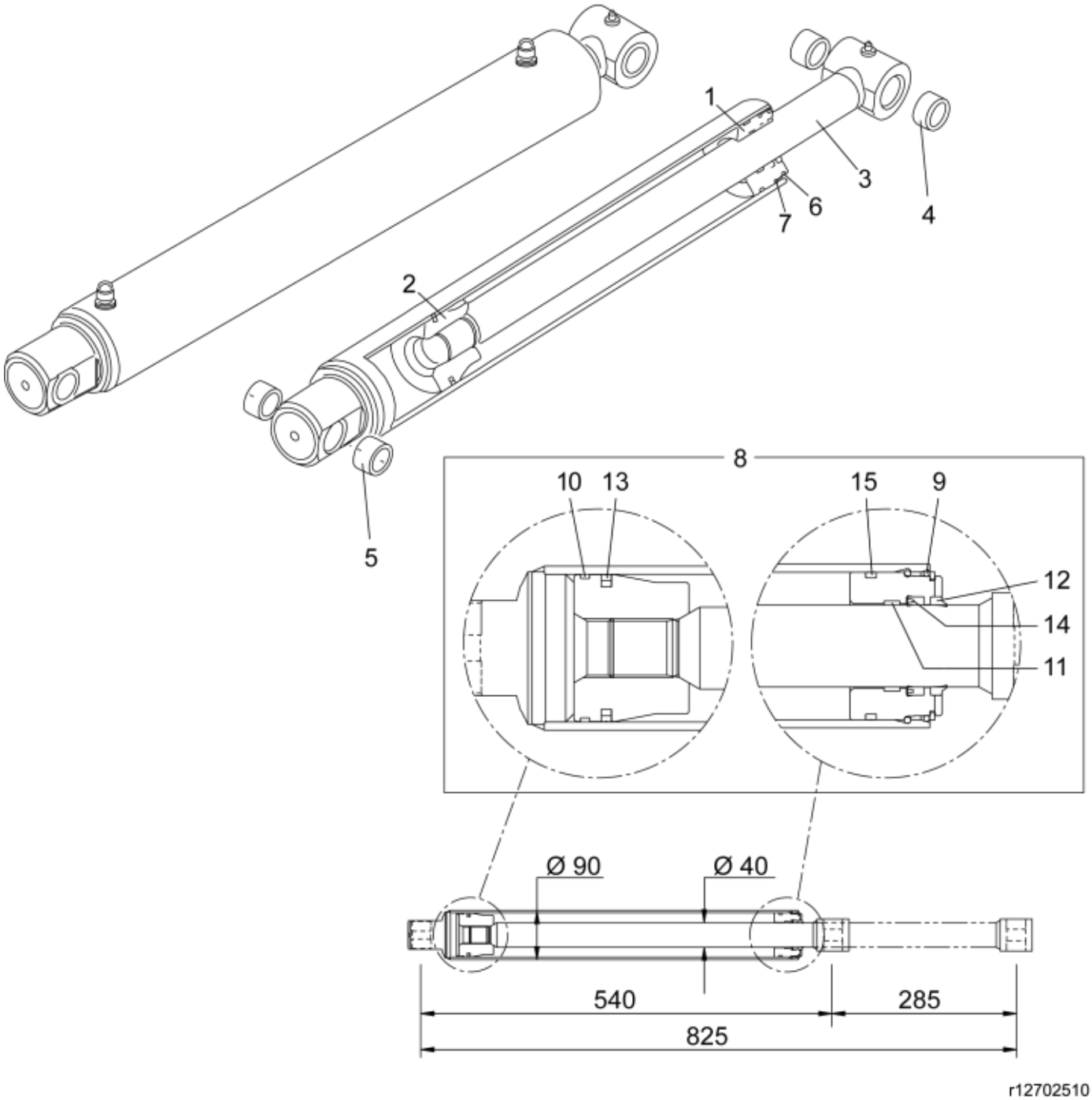

© 2025 Jost

Description	90/40
Part assemblies	Cylinder
Specification	Year To: 1/25/2026 12:00:00 AM

PartNo	Pos	Qty	Name	Specifications
12709011	1	1	Bearing	
12709012	2	1	Piston	
12702523	3	1	Piston rod cpl.	
5018514	4	2	• Bushing	D35 L=20
5018514	5	2	Bushing	D35 L=20
5016619	6	1	Retaining ring	
5016666	7	1	Retaining ring	
5033708	8	1	Seal kit	
5037240	9	1	• O-ring	82,14 x 3,53
5040017	10	1	• Guide ring	90/85 x 5,5
5040010	11	1	• Guide ring	40/45x9,7
5038101	12	1	• Wiper	40/50x7/10
5040027	13	1	• Piston seal	90/74,5 x 6,3
5038254	14	1	• Seal	40/50x10
5039007	15	1	• Cover seal	90 x 83 x 6,5

© 2025 Jost