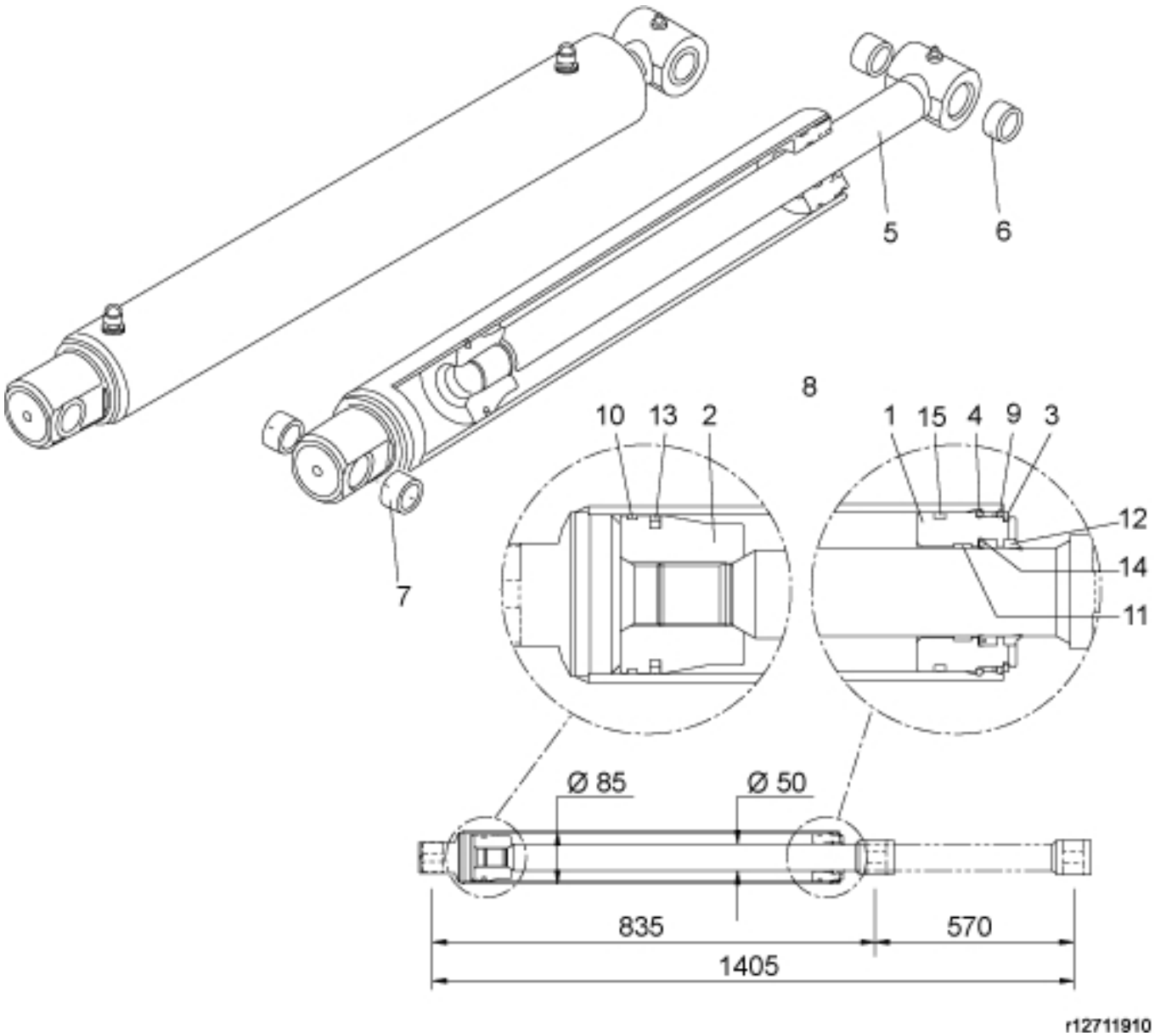

© 2025 Jost

Description	85/50
Part assemblies	Lift Cylinder
Specification	Specification: Glossy Black

PartNo	Pos	Qty	Name	Specifications
12708611	1	1	Bearing	
12708512	2	1	Piston	D85
5016623	3	1	Retaining ring	
5016672	4	1	Retaining ring	
12712023	5	1	Piston rod cpl.	
5018514	6	2	• Bushing	D35 L=20
5018514	7	2	Bushing	D35 L=20
5033771	8	1	Seal kit	D85/50
5037249	9	1	• O-ring	NBR 70Sh
5040016	10	1	• Guide ring	85/80x5.5
5040011	11	1	• Guide ring	50/55 x 9,7
5038104	12	1	• Wiper	50/60 x 7/10
5040026	13	1	• Piston seal	85/69.5x6.3
5038256	14	1	• Seal	50/60 x 10
5039006	15	1	• Seal kit	85 x 78.6 x 6.4

© 2025 Jost