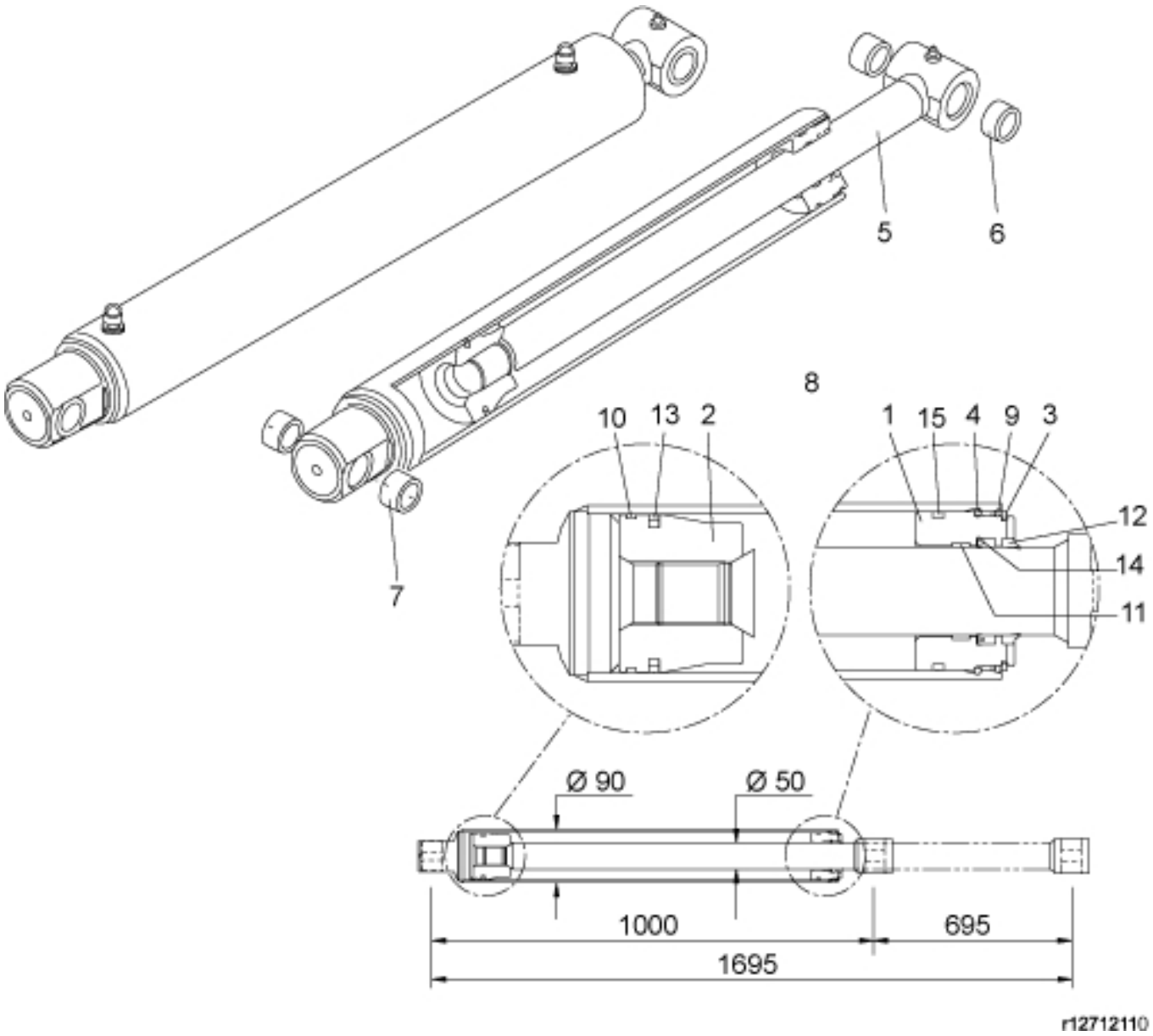

© 2025 Jost

Description	90/50
Part assemblies	Lift Cylinder
Specification	Specification: Glossy Black

PartNo	Pos	Qty	Name	Specifications
12709111	1	1	Bearing	
12709012	2	1	Piston	
5016619	3	1	Retaining ring	
5016666	4	1	Retaining ring	
12712123	5	1	Piston rod cpl.	
5018514	6	2	• Bushing	D35 L=20
5018514	7	2	Bushing	D35 L=20
5033709	8	1	Seal kit	
5037240	9	1	• O-ring	82,14 x 3,53
5040017	10	1	• Guide ring	90/85 x 5,5
5040011	11	1	• Guide ring	50/55 x 9,7
5038104	12	1	• Wiper	50/60 x 7/10
5040027	13	1	• Piston seal	90/74,5 x 6,3
5038256	14	1	• Seal	50/60 x 10
5039007	15	1	• Cover seal	90 x 83 x 6,5

© 2025 Jost