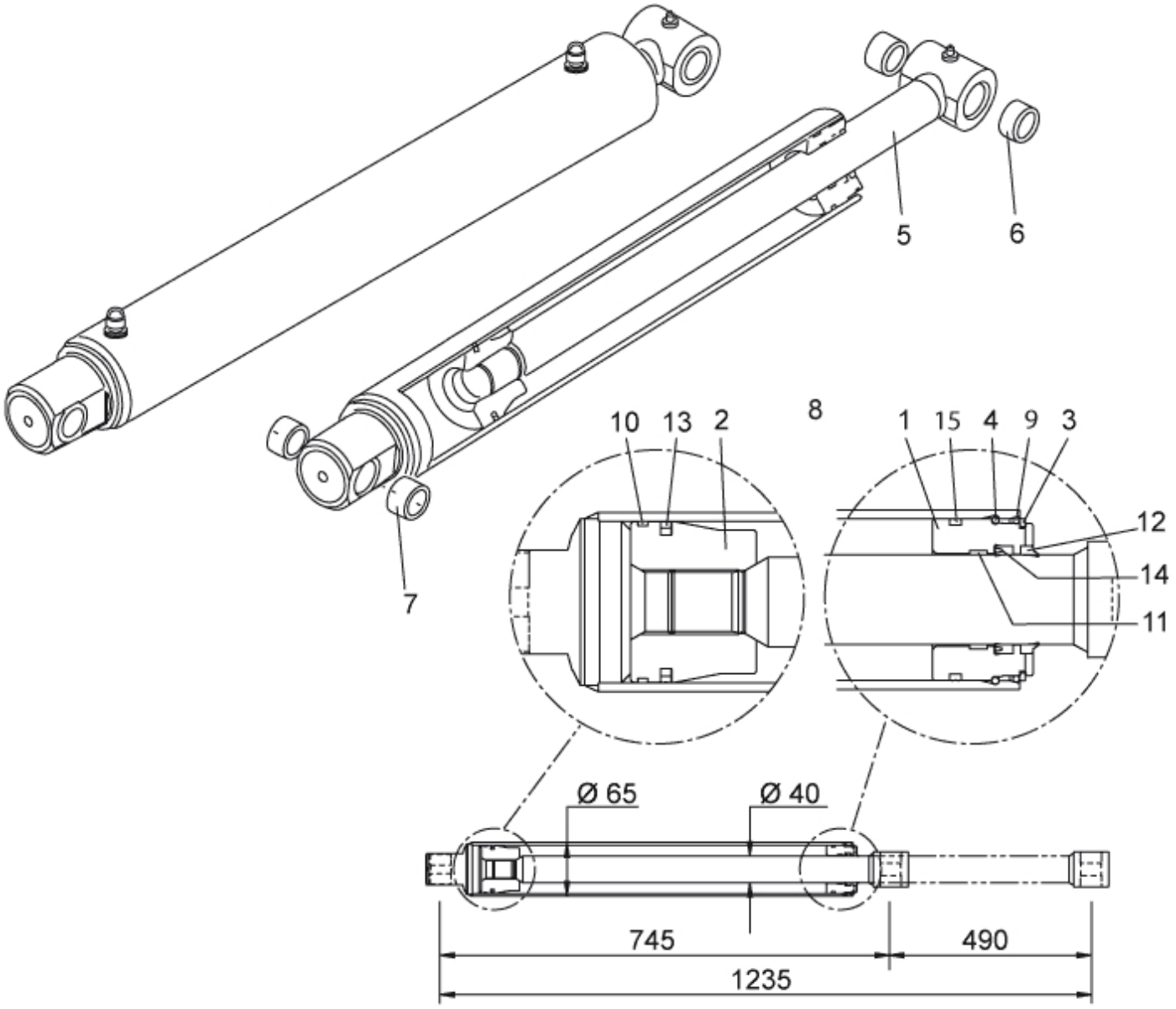

r12712210

© 2025 Jost

Description	65/40
Part assemblies	Lift Cylinder
Specification	Specification: Glossy Black

PartNo	Pos	Qty	Name	Specifications
12706511	1	1	Bearing	D65/40
12706512	2	1	Piston	
5016608	3	1	Circlip	
5016668	4	1	Retaining ring	
12712223	5	1	Piston rod cpl.	
5018515	6	2	• Bushing	D30 L=20
5018515	7	2	Bushing	D30 L=20
5033703	8	1	Seal kit	
5037242	9	1	• O-ring	58,74 x 3,53
5040012	10	1	• Guide ring	65/60 x 5,5
5040010	11	1	• Guide ring	40/45x9,7
5038101	12	1	• Wiper	40/50x7/10
5040022	13	1	• Piston seal	65/49,5 x 6,3
5038254	14	1	• Seal	40/50x10
5039002	15	1	• Cover seal	65 x 59,6 x 6,2

© 2025 Jost