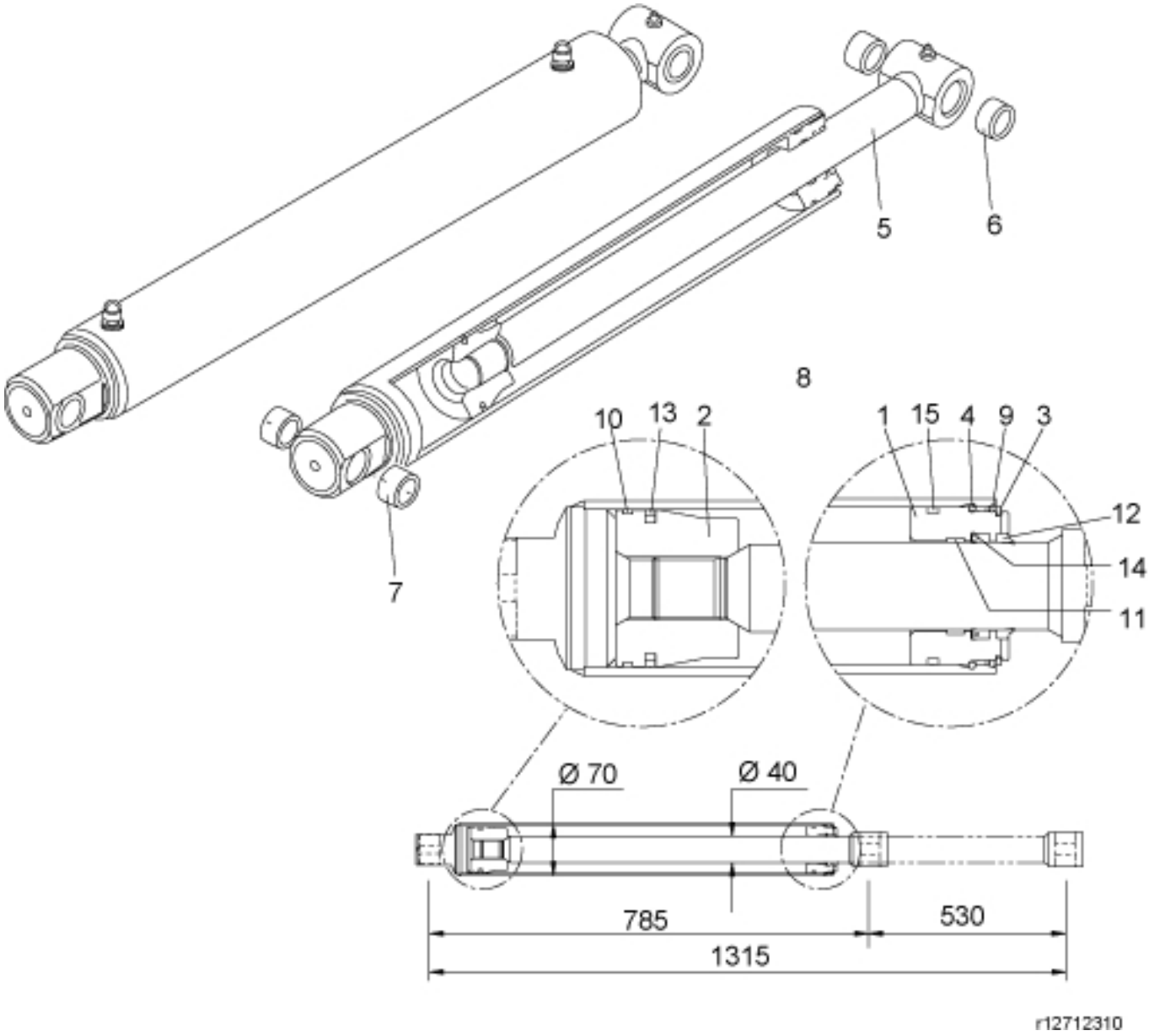

© 2025 Jost

Description	70/40
Part assemblies	Lift Cylinder
Specification	Specification: Glossy Black

PartNo	Pos	Qty	Name	Specifications
12707011	1	1	Bearing	D70/40
12707012	2	1	Piston	D70
5016621	3	1	Retaining ring	
5016669	4	1	Retaining ring	
12711823	5	1	Piston rod cpl.	
5018515	6	2	• Bushing	D30 L=20
5018515	7	2	Bushing	D30 L=20
5033704	8	1	Seal kit	
5037243	9	1	• O-ring	63,09x3,53
5040013	10	1	• Guide ring	70/65x5,5
5040010	11	1	• Guide ring	40/45x9,7
5038101	12	1	• Wiper	40/50x7/10
5040023	13	1	• Piston seal	70/54,5x6,3
5038254	14	1	• Seal	40/50x10
5039003	15	1	• Cover seal	70 x 64,6 x 6,2

© 2025 Jost