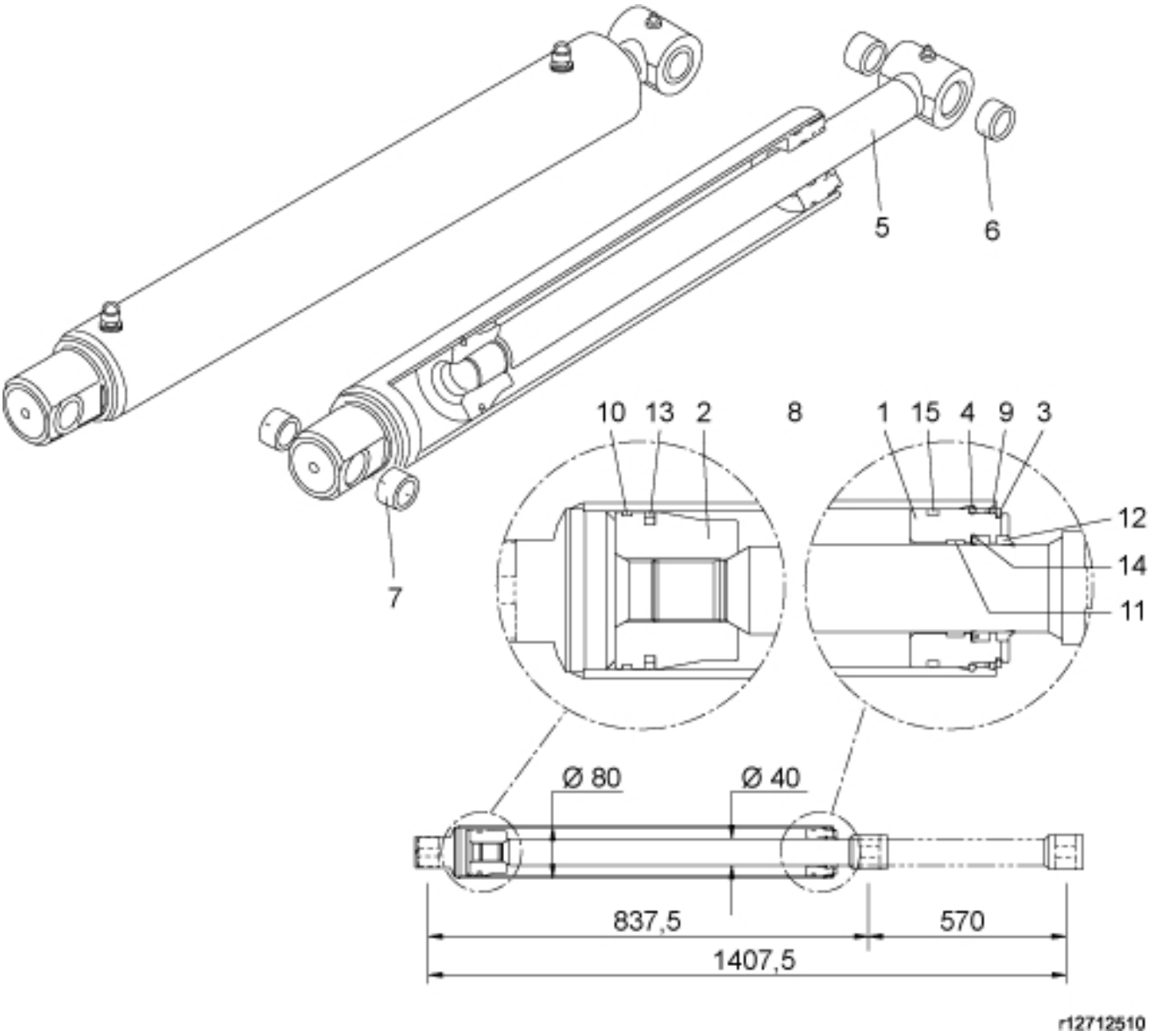

© 2025 Jost

Description	80/40
Part assemblies	Tilt Cylinder
Specification	Specification: Glossy Black

PartNo	Pos	Qty	Name	Specifications
12708011	1	1	Bearing	D80/40
12708012	2	1	Piston	D80
5016620	3	1	Retaining ring	
5016667	4	1	Retaining ring	
12712523	5	1	Piston rod cpl.	
5018514	6	2	• Bushing	D35 L=20
5018515	7	2	Bushing	D30 L=20
5033706	8	1	Seal kit	
5037241	9	1	• O-ring	72,62 x 3,53
5040015	10	1	• Guide ring	80/75 x 5,5
5039005	11	1	• Cover seal	80 x 73,6 x 6,4
5038101	12	1	• Wiper	40/50x7/10
5040025	13	1	• Piston seal	80/64,5 x 6,3
5038254	14	1	• Seal	40/50x10
5040010	15	1	• Guide ring	40/45x9,7

© 2025 Jost