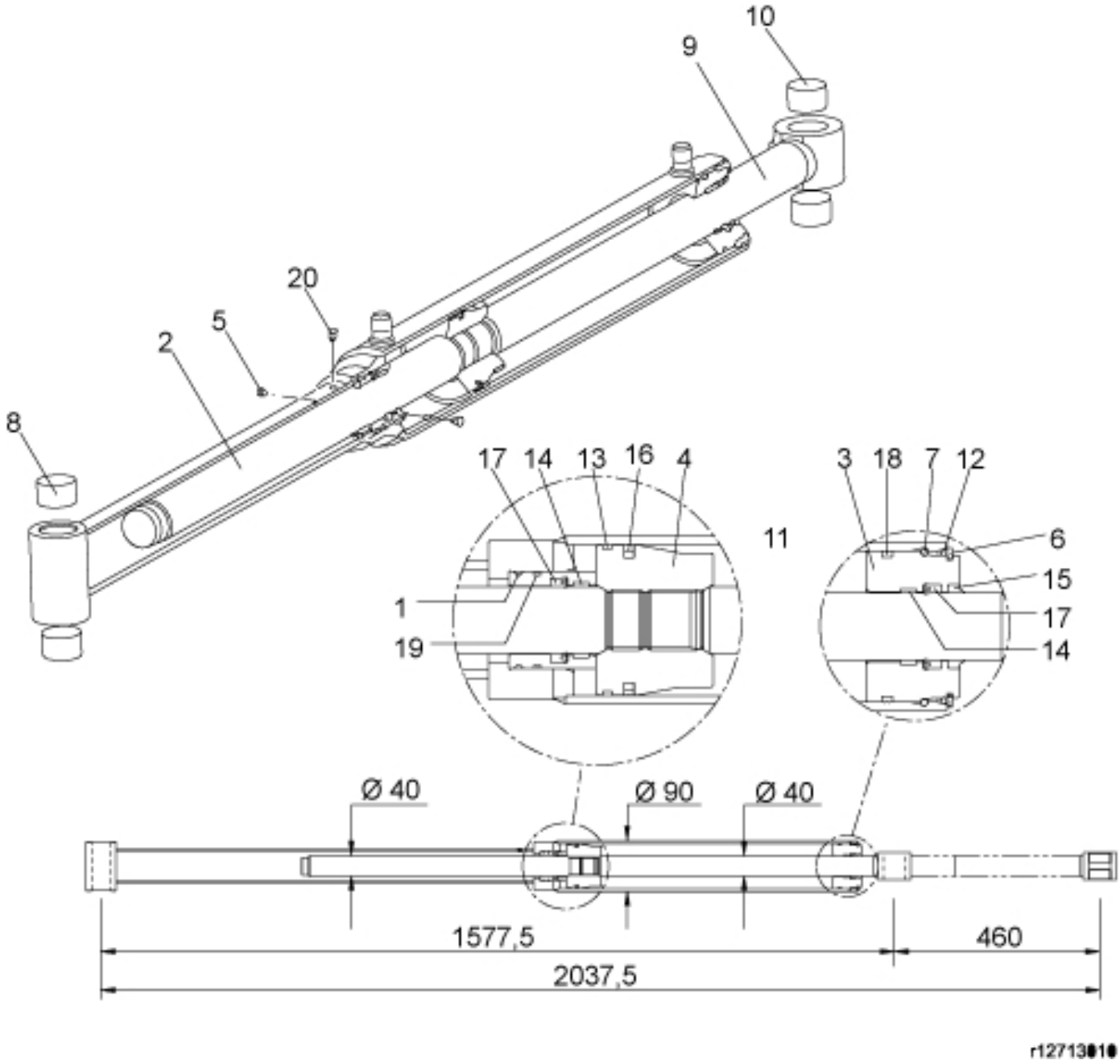
10
9
20
5
2
8
17
14
13
16
4
11
3
18
7
12
6
15
17
14
1
19
Ø 40
Ø 90
Ø 40
1577,5
460
2037,5
r12713810

© 2025 Jost

Description	90/40/40
Part assemblies	Tilt Cylinder
Specification	Specification: Glossy Black

PartNo	Pos	Qty	Name	Specifications
12700017	1	1	Guide	
12700915	2	1	Rear rod	
12709011	3	1	Bearing	
12709012	4	1	Piston	
5005983	5	2	Stop screw	S6SS M6x16
5016619	6	1	Retaining ring	
5016666	7	1	Retaining ring	
5018514	8	2	Bushing	D35 L=20
12713023	9	1	Piston rod cpl.	
5018513	10	2	• Bushing	D40 L=20
5033716	11	1	Seal kit	
5037240	12	1	• O-ring	82,14 x 3,53
5040017	13	1	• Guide ring	90/85 x 5,5
5040010	14	2	• Guide ring	40/45x9,7
5038101	15	1	• Wiper	40/50x7/10
5040027	16	1	• Piston seal	90/74,5 x 6,3
5038254	17	2	• Seal	40/50x10
5039007	18	1	• Cover seal	90 x 83 x 6,5
5039001	19	1	• Seal kit	58 x 53.4 x 4.1
5022095	20	1	• Plug	

© 2025 Jost