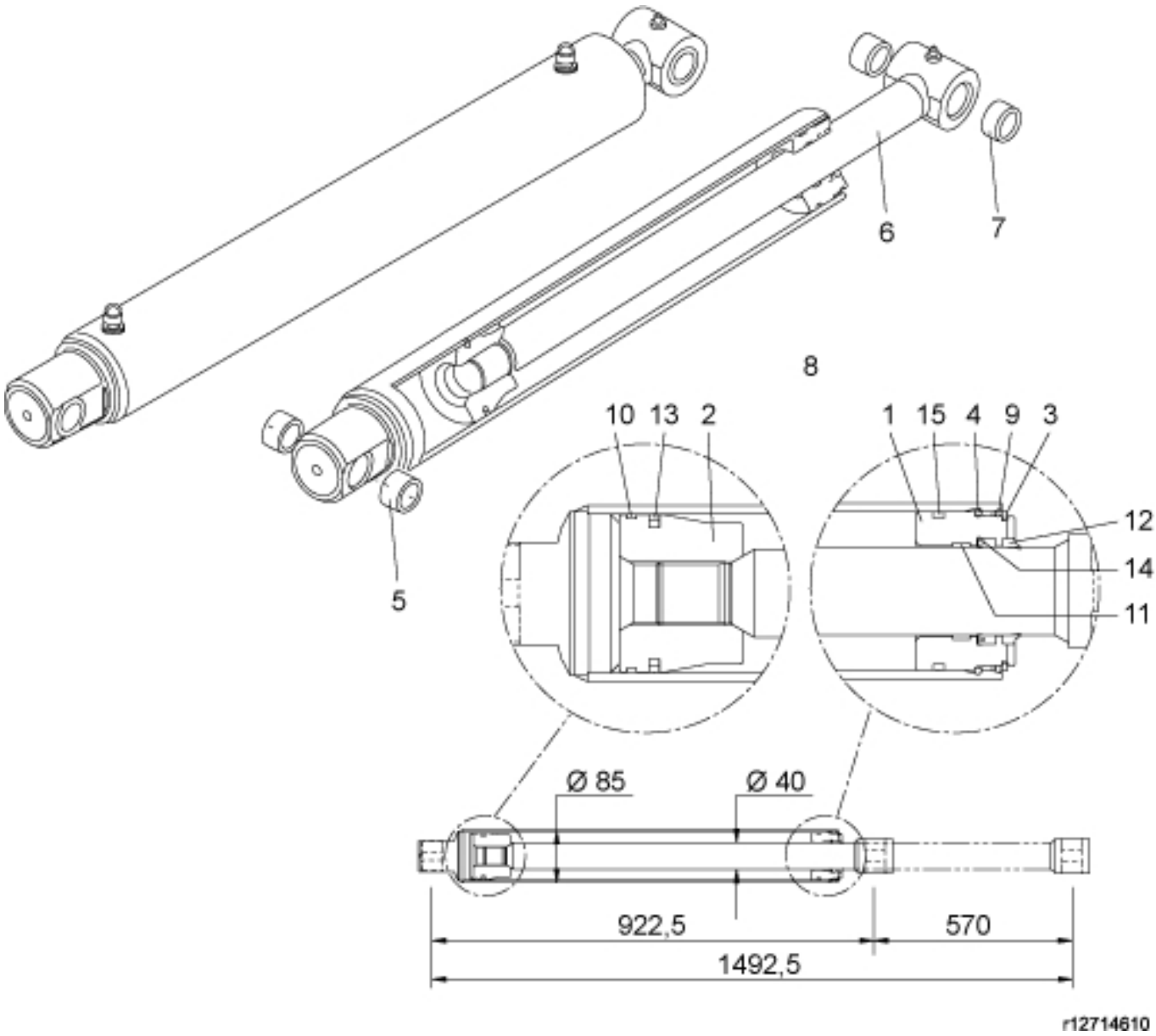

© 2025 Jost

Description	85/40
Part assemblies	Tilt Cylinder
Specification	Specification: Glossy Black

PartNo	Pos	Qty	Name	Specifications
12708511	1	1	Bearing	D85/40
12708512	2	1	Piston	D85
5016623	3	1	Retaining ring	
5016672	4	1	Retaining ring	
5018514	5	2	Bushing	D35 L=20
12714523	6	1	Piston rod cpl.	
5018513	7	2	• Bushing	D40 L=20
5033707	8	1	Seal kit	
5037249	9	1	• O-ring	NBR 70Sh
5040016	10	1	• Guide ring	85/80x5.5
5040010	11	1	• Guide ring	40/45x9,7
5038101	12	1	• Wiper	40/50x7/10
5040026	13	1	• Piston seal	85/69.5x6.3
5038254	14	1	• Seal	40/50x10
5039006	15	1	• Seal kit	85 x 78.6 x 6.4

© 2025 Jost