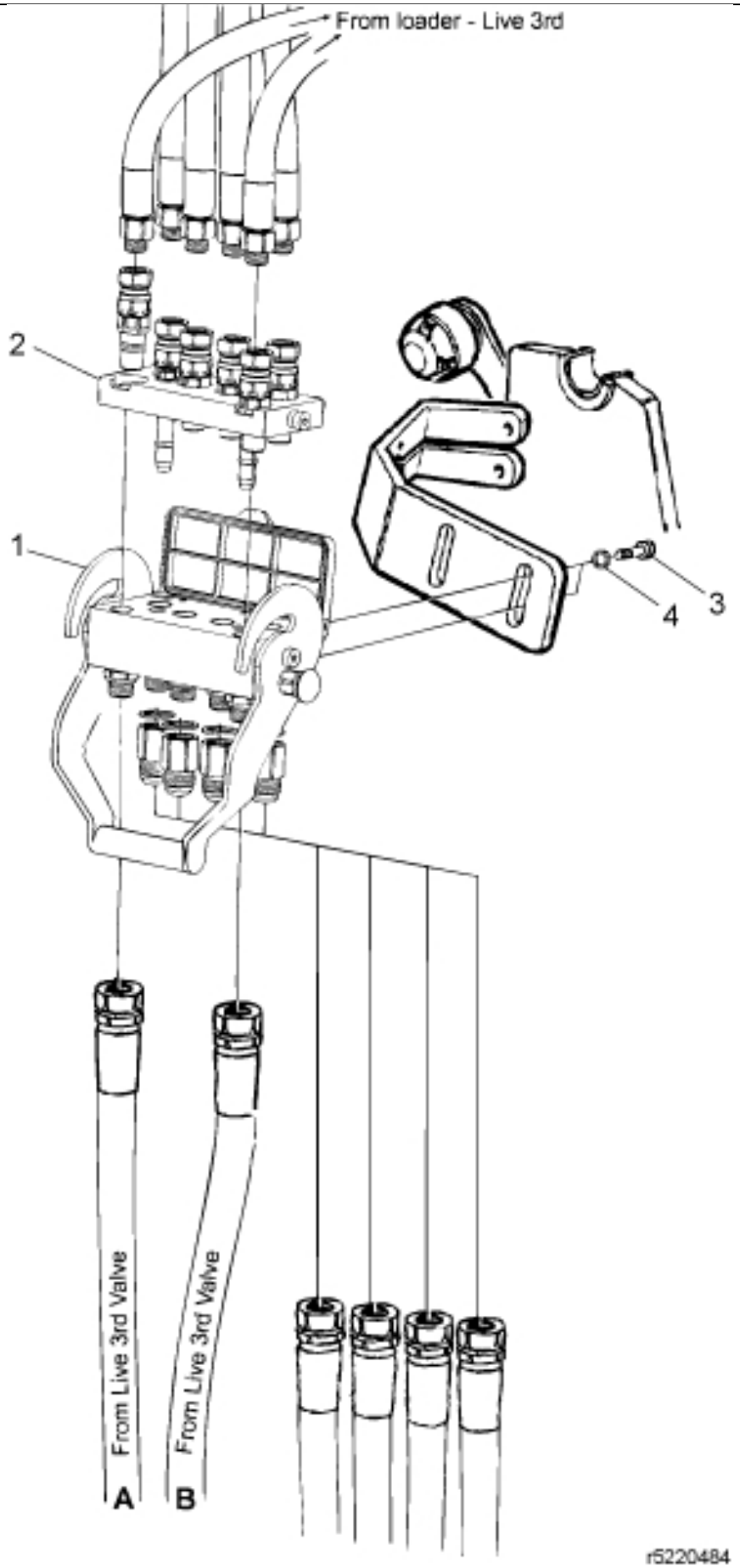
From loader - Live 3rd
2
1
4
3
From Live 3rd Valve
A
From Live 3rd Valve
B
r5220484

© 2025 Jost

Description	6 Port QC
Part assemblies	Hose connection

PartNo	Pos	Qty	Name	Specifications
5220484		1 PCS	Hose connection	
5044945	1	1 PCS	Multi coupling, lower part	
5044923	2	1	Multi coupling, upper part	
5002053	3	2	Screw	M6S 8 x 30
5013101	4	2	Washer	BRB 8,4 x 16

© 2025 Jost