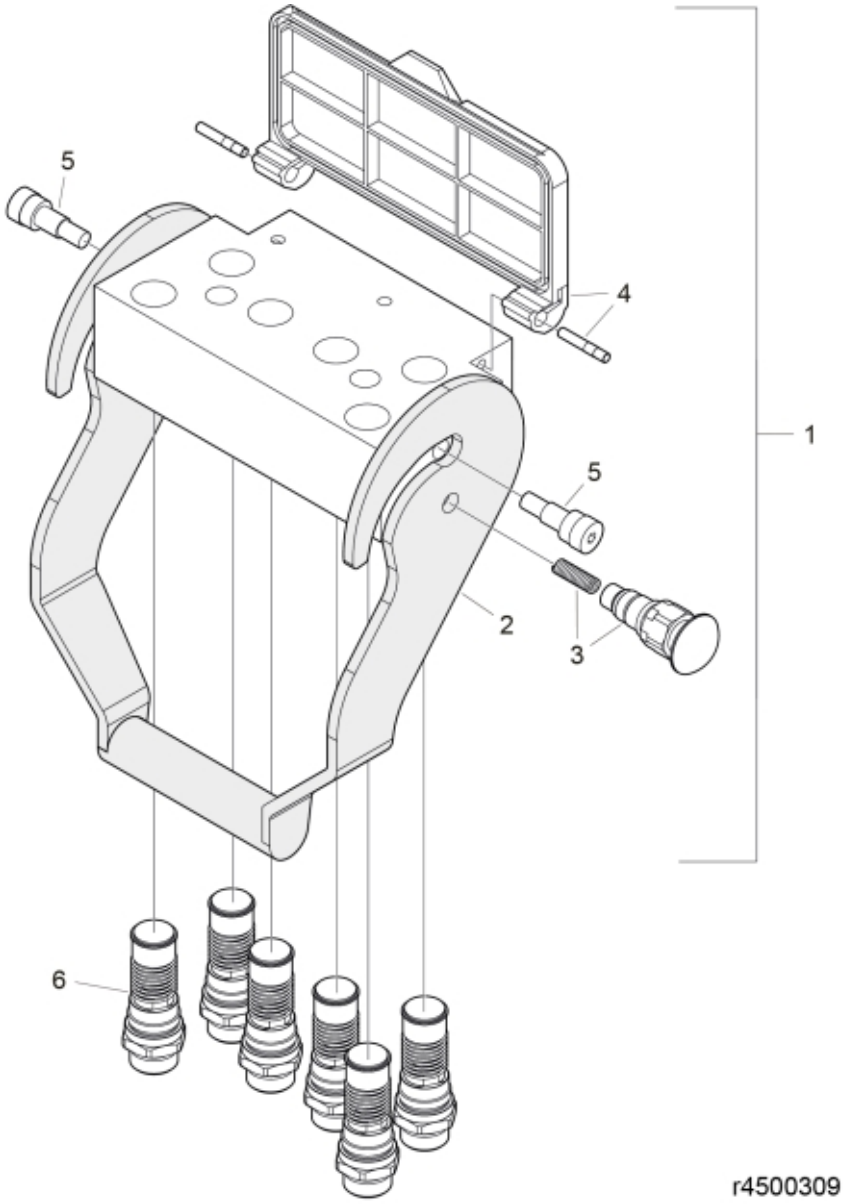

© 2025 Jost

Description	6 Port QC
Part assemblies	Multi coupling, lower part

PartNo	Pos	Qty	Name	Specifications
5044928	1	1	Lower part HQ 6	
5044938	2	1	Lever	
4501199	3	1	Safety kit	
5044907	4	1	Cap	
10301547	5	2	Screw kit	VP4
5028064	6	6	Coupling JIC	

© 2025 Jost