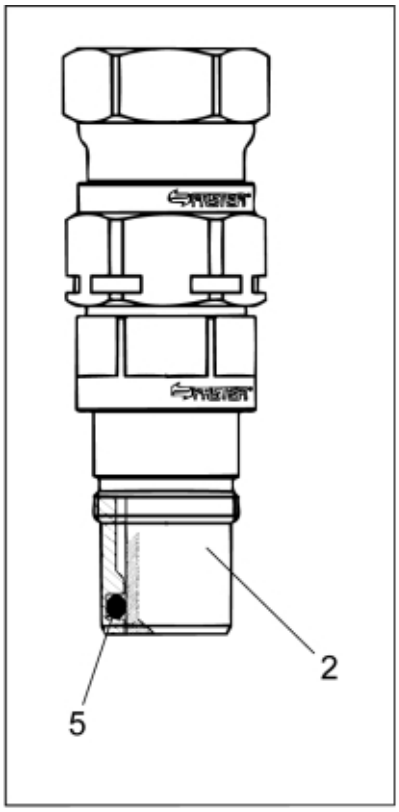

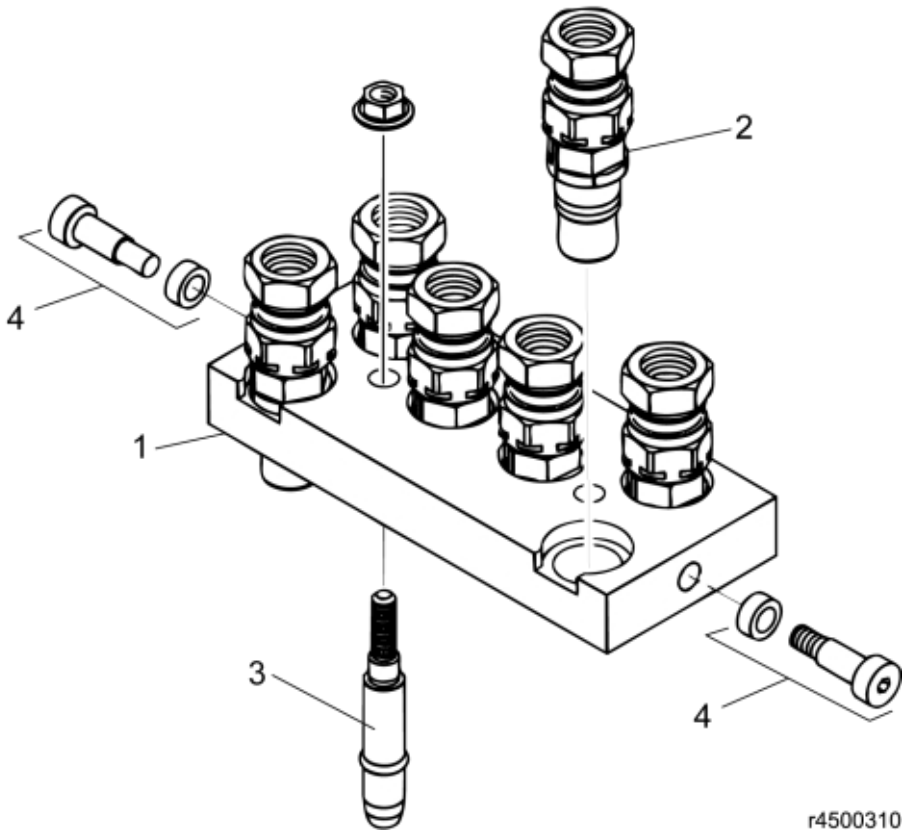

© 2025 Jost

Description	6 Port QC
Part assemblies	Multi coupling, upper part

PartNo	Pos	Qty	Name	Specifications
5044929	1	1	Upper part HQ 6	
10301569	2	6	Coupler (M)	
10301554	3	2	Dowel kit	Kit, 2 pcs
10301547	4	2	Screw kit	VP4
5045407	5	1	Seal kit	Supplied in bags of 10 pcs

© 2025 Jost