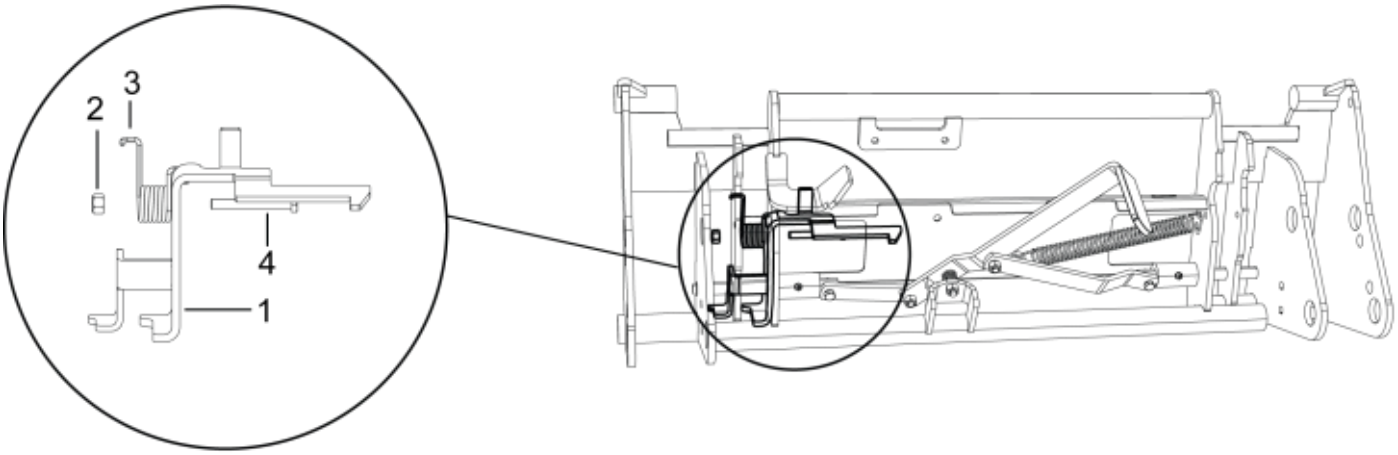

r4500328

© 2025 Jost

Part assemblies	Click-on

PartNo	Pos	Qty	Name	Specifications
5220346	1	1	Link	
5021941	2	1 PCS	Spring	
5002092	3	1	Screw	M6S M10x80 (8.8)
5011554	4	1	Nut	Loc-King M10

© 2025 Jost