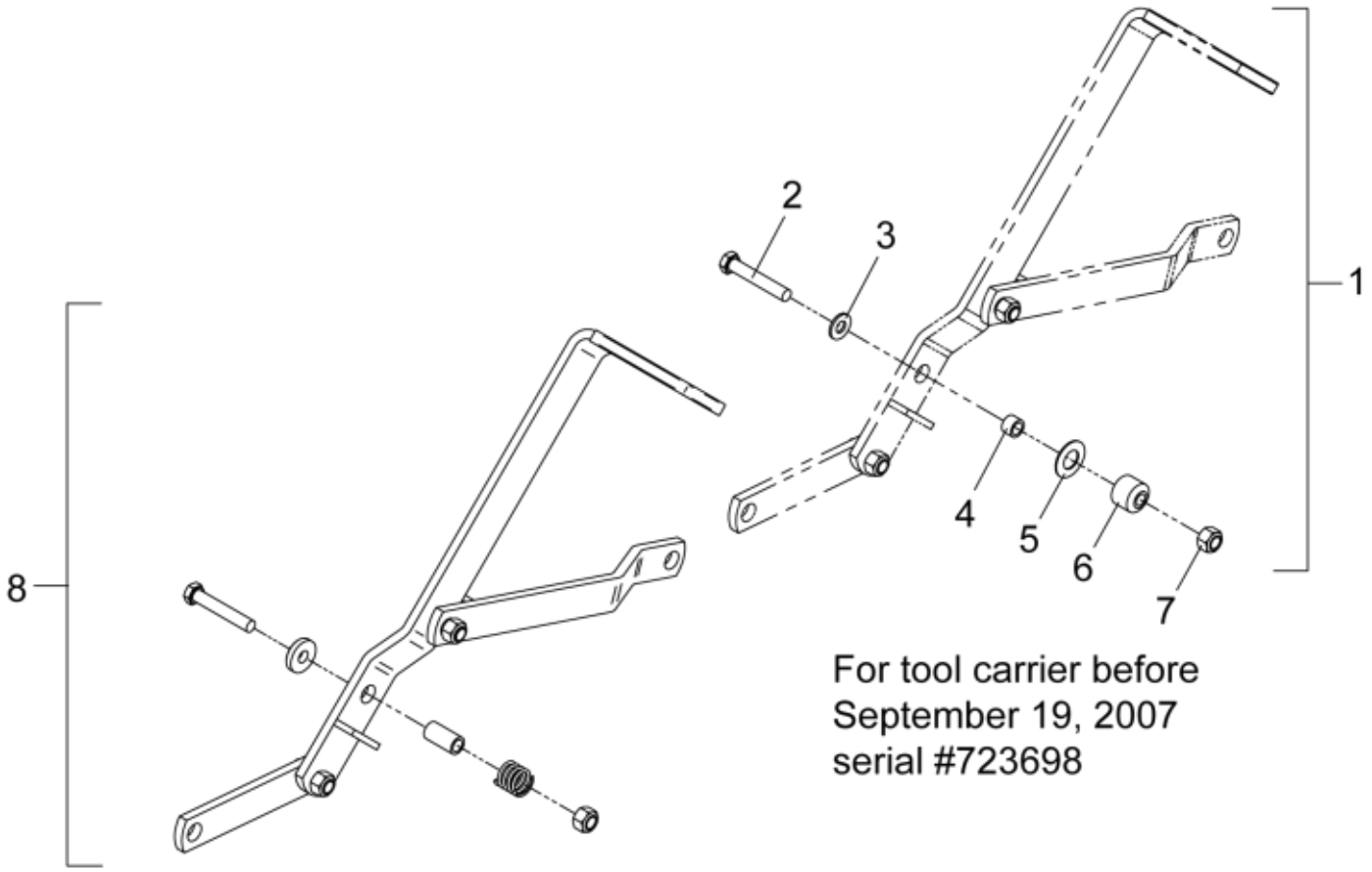

r4500359

© 2025 Jost

Part assemblies Lever kit

PartNo	Pos	Qty	Name	Specifications
4500366	1	1 PCS	Turning Centre Kit	
5002080	2	1	• Screw	M6S 10 x 60
5219100	3	1	• Spacer	
5013110	4	1	• Washer	BRB 10.5x22x2
5013914	5	1 PCS	• Disc Spring	
5219033	6	1 PCS	• Spacer	
5011554	7	1	• Nut	Loc-King M10
5220341	8	1	Lever kit	

© 2025 Jost