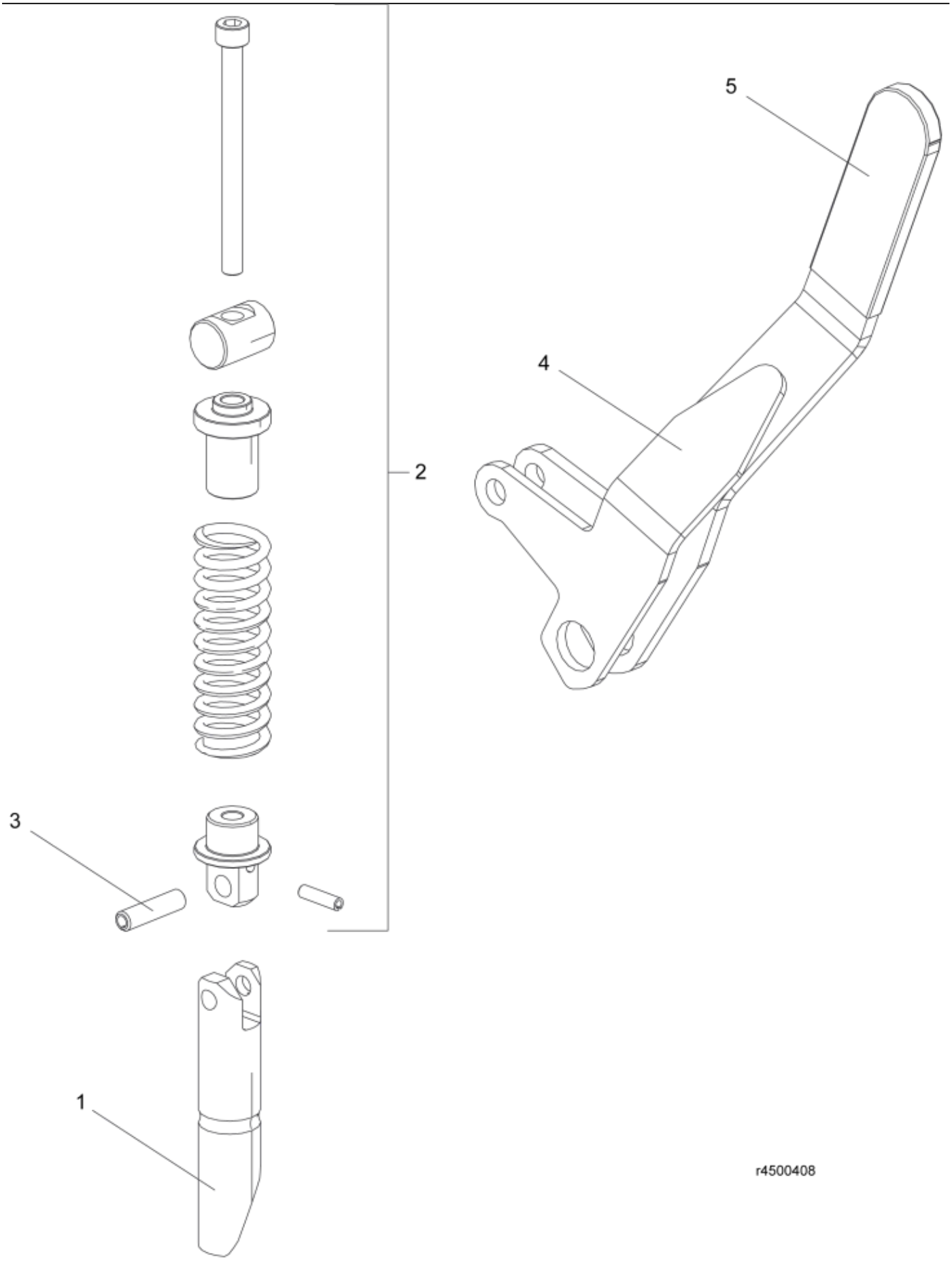

© 2025 Jost

Part assemblies Locking mechanism RH

PartNo	Pos	Qty	Name	Specifications
5220239	1	1	Pin	
4500409	2	1	Spring Kit	
5016996	3	1	Pin	
5220236	4	1	Handle RH	
5022144	5	1	Cover	

© 2025 Jost