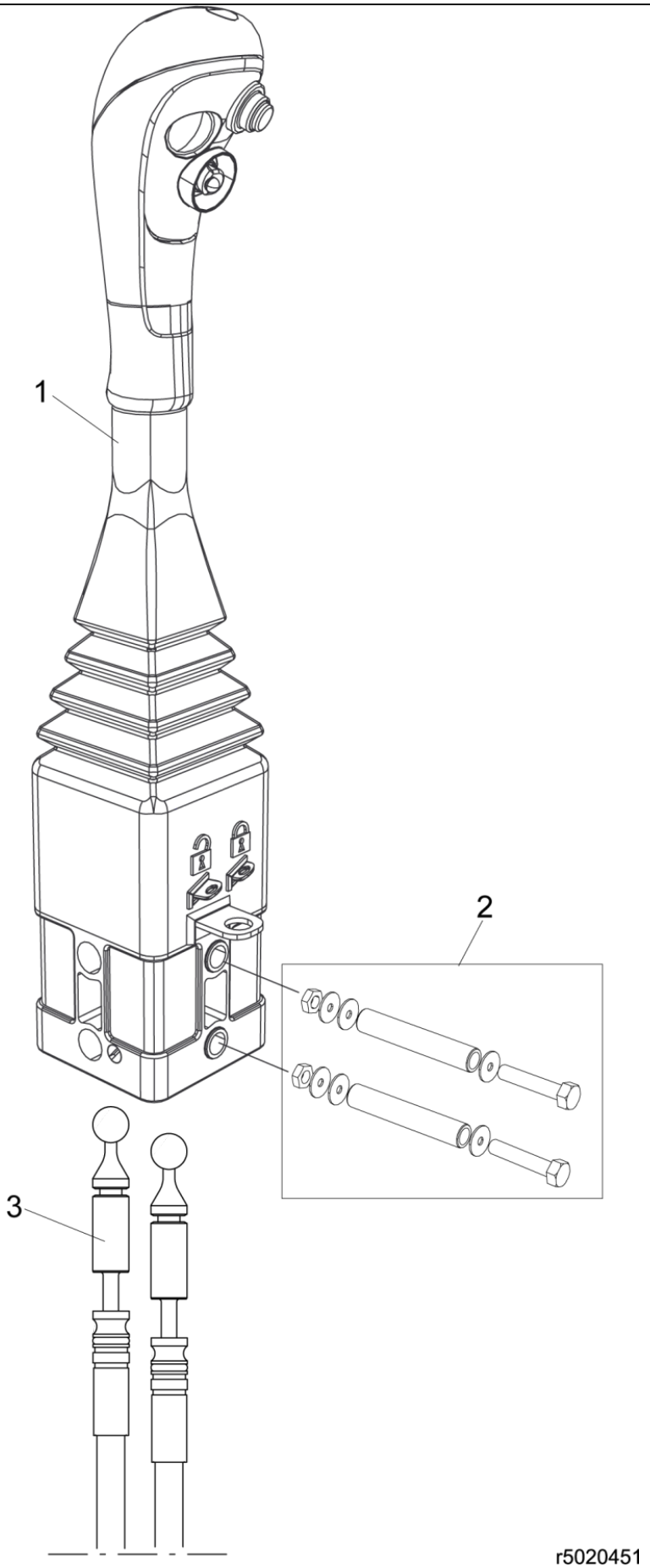

© 2025 Jost

Part assemblies Lever kit (1600mm)

PartNo	Pos	Qty	Name	Specifications
5020938	1		Control lever	
5220354	2		• Screw kit	Part is included in kit 5021158 Lever kit (2000mm)
5020942	3		Control cable	L=1600mm (5020353)

© 2025 Jost