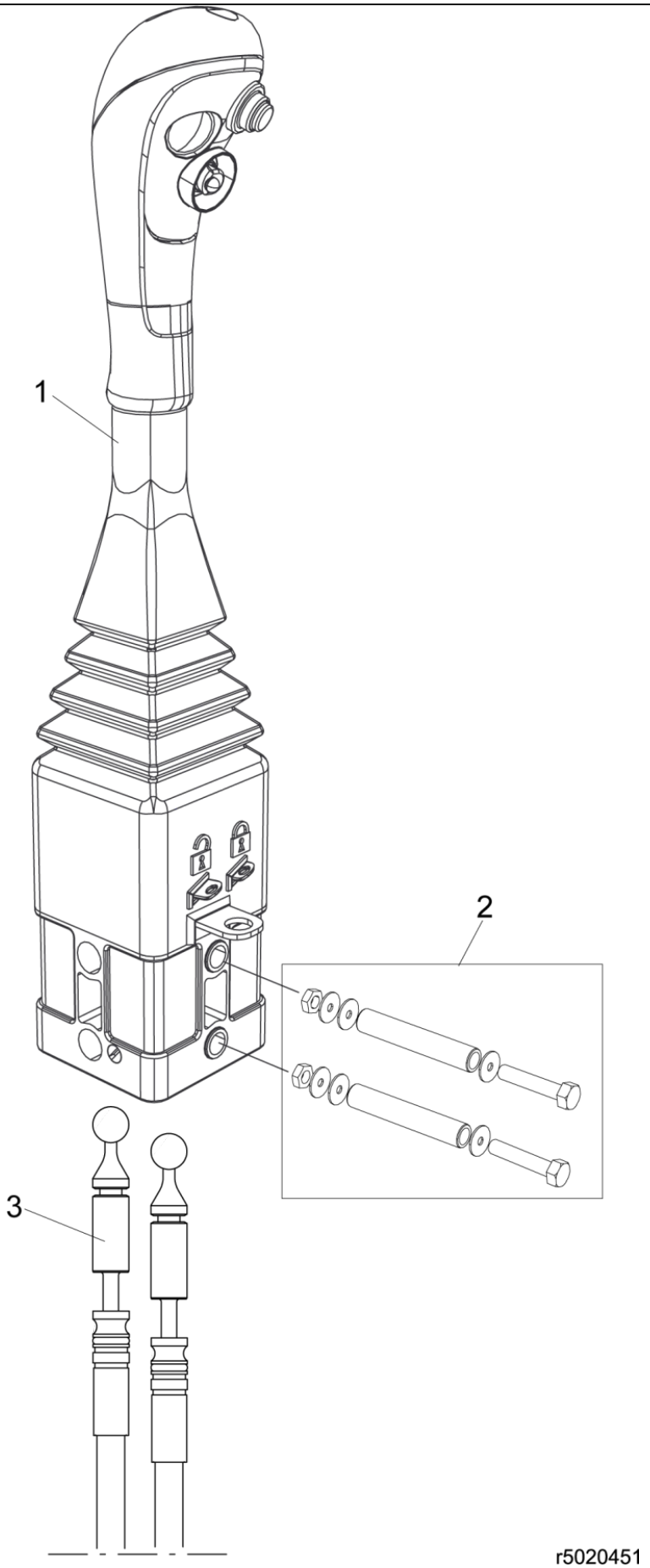

© 2025 Jost

Part assemblies	Lever kit
Specification	Specification: L=2200mm

PartNo	Pos	Qty	Name	Specifications
5020938	1		Control lever	
5220354	2		• Screw kit	Part is included in kit 5021158 Lever kit (2000mm)
5020945	3		Control cable	L=2200mm (5020356)

© 2025 Jost