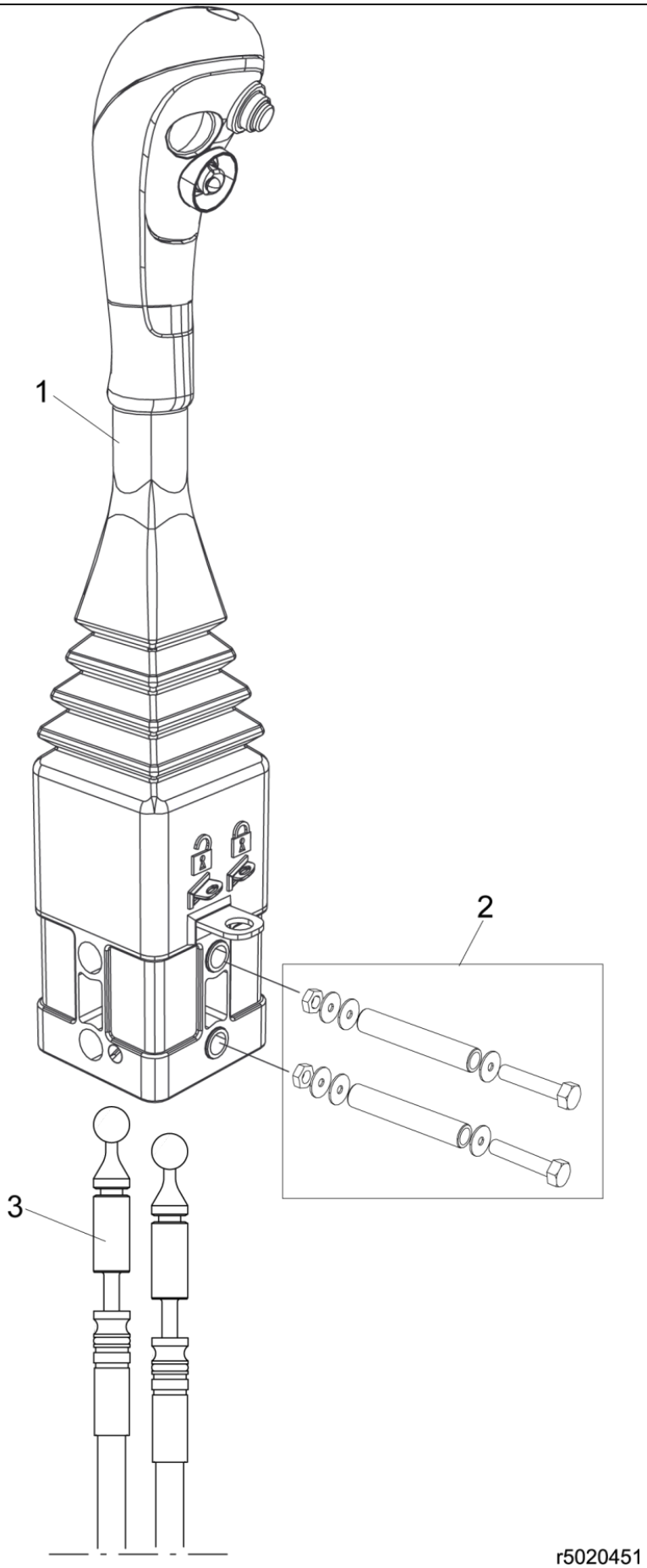

© 2025 Jost

Part assemblies		Lever kit		
Specification		Specification: L=2400mm		
PartNo	**Pos**	**Qty**	**Name**	**Specifications**
5020938	1		Control lever	
5220354	2		• Screw kit	Part is included in kit 5021158 Lever kit (2000mm)
5020946	3		Control cable	L=2400mm (5020357)

© 2025 Jost