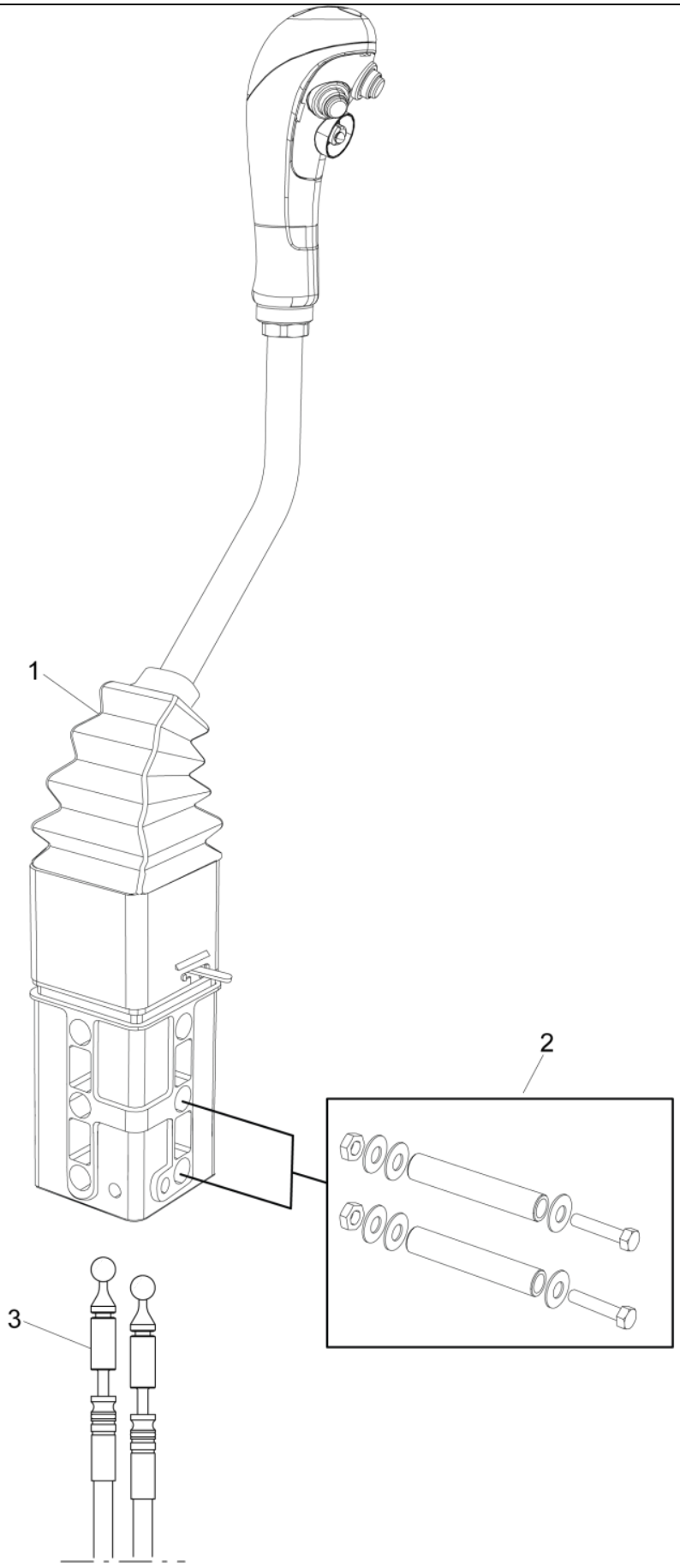

© 2025 Jost

Part assemblies Lever kit (1600mm)

PartNo	Pos	Qty	Name	Specifications
5020922	1	1 PCS	Control lever	
5220354	2	1	• Screw kit	Part is included in kit 5021158 Lever kit (2000mm)
5021001	3	2	Cable	L=1600mm

© 2025 Jost