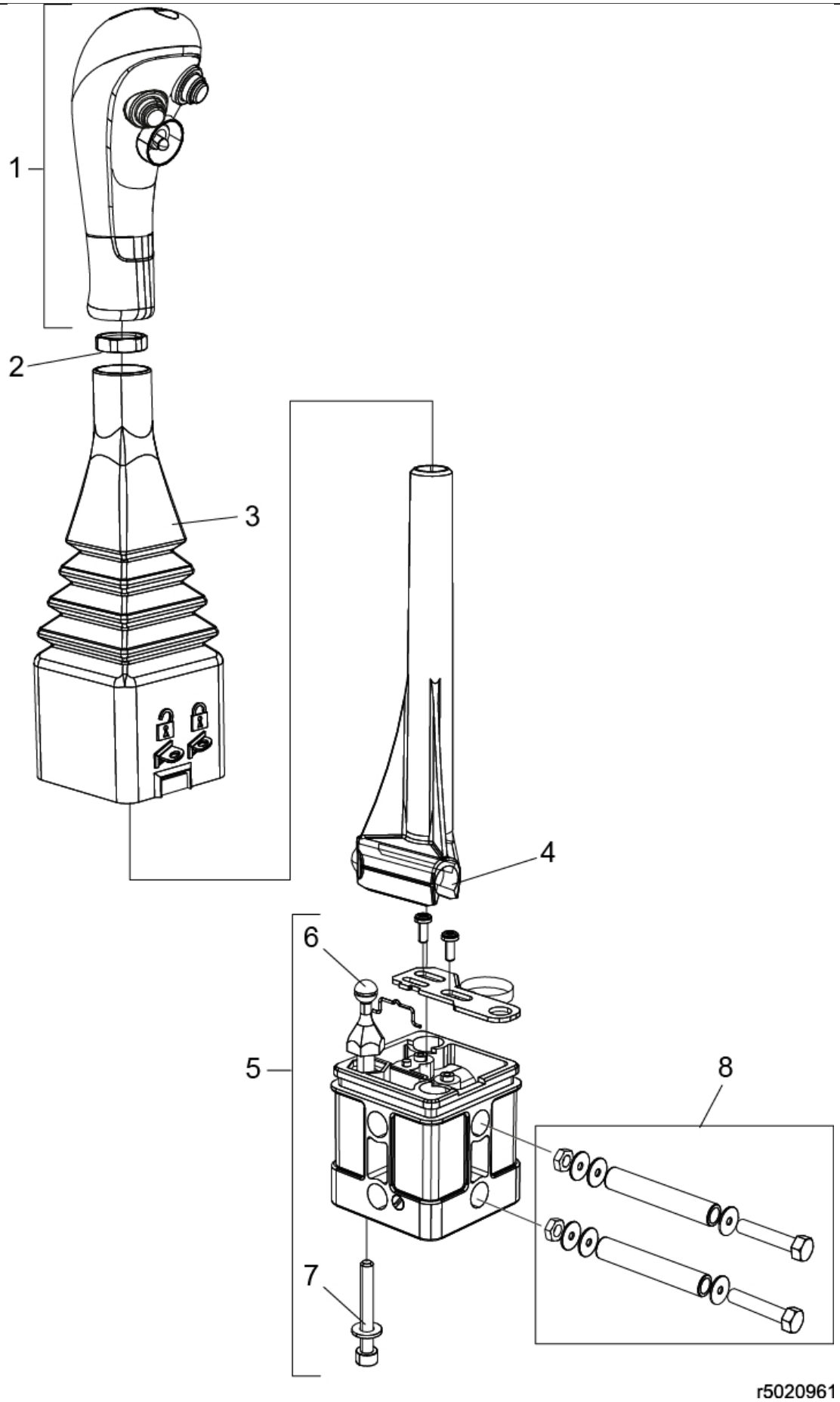

© 2025 Jost

Part assemblies Control lever

PartNo	Pos	Qty	Name	Specifications
5020960	1	1	Handle	
4500351	2	1	• Nut	
5021043	3	1	Gaiter	Replaces 4500350
4500352	4	1	Lever	
4500343	5	1	Housing cpl.	
4500353	6	1	• Pivot	
5004030	7	1	• Screw	MC6S M6 x 45
5220354	8	1	Screw kit	Part is included in kit 5021158 Lever kit (2000mm)

© 2025 Jost