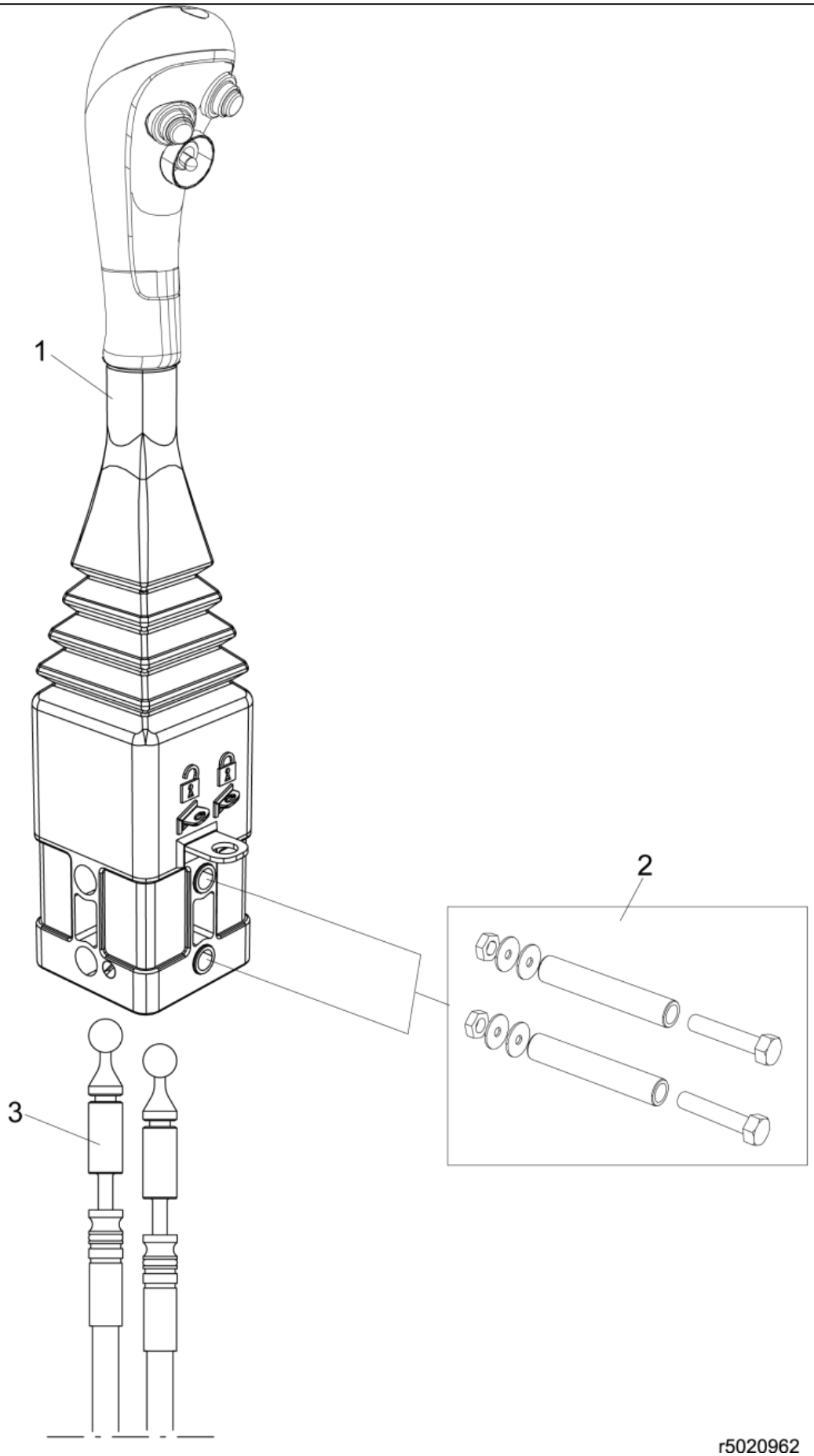

© 2025 Jost

Part assemblies	Lever kit (1800mm)

PartNo	Pos	Qty	Name	Specifications
5020961	1	1	Control lever	
5220354	2	1	• Screw kit	Part is included in kit 5021158 Lever kit (2000mm)
5020943	3	2	Control cable	L=1800mm (5020354)

© 2025 Jost