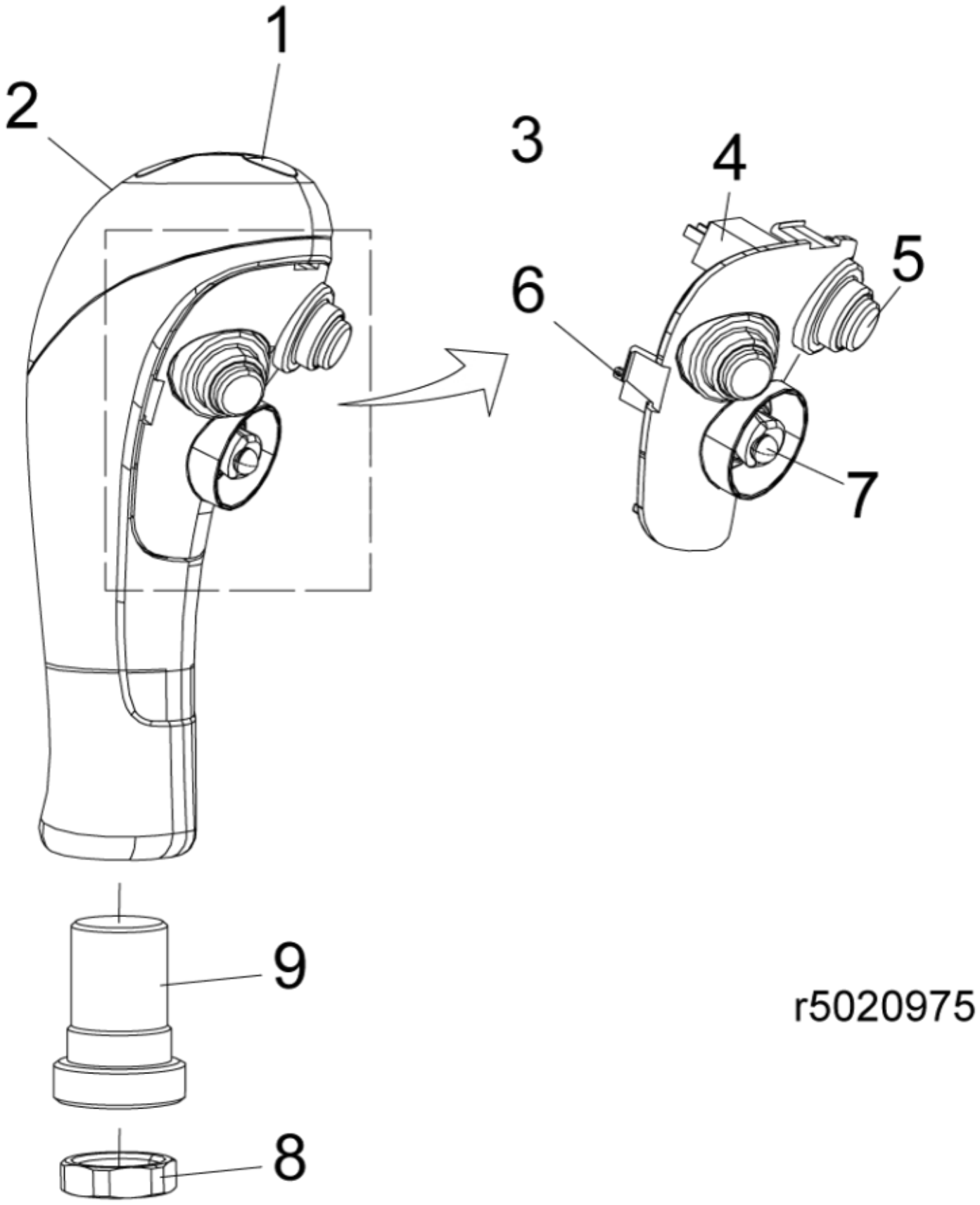

© 2025 Jost

Part assemblies Handle

PartNo	Pos	Qty	Name	Specifications
5020386	1	1	Direction indicator	RH
4500357	2	1	Decal	
5020957	3	1	Boot	3 switches
5024365	4	2	• Switch	A 294813
5024366	5	2	• Boot	A 294814
4500354	6	1	• Switch	
4500355	7	1	• Gaitor	
4500403	8	1	Nut	M14x1.5
4500404	9	1	Adaptor	M14/M18

© 2025 Jost