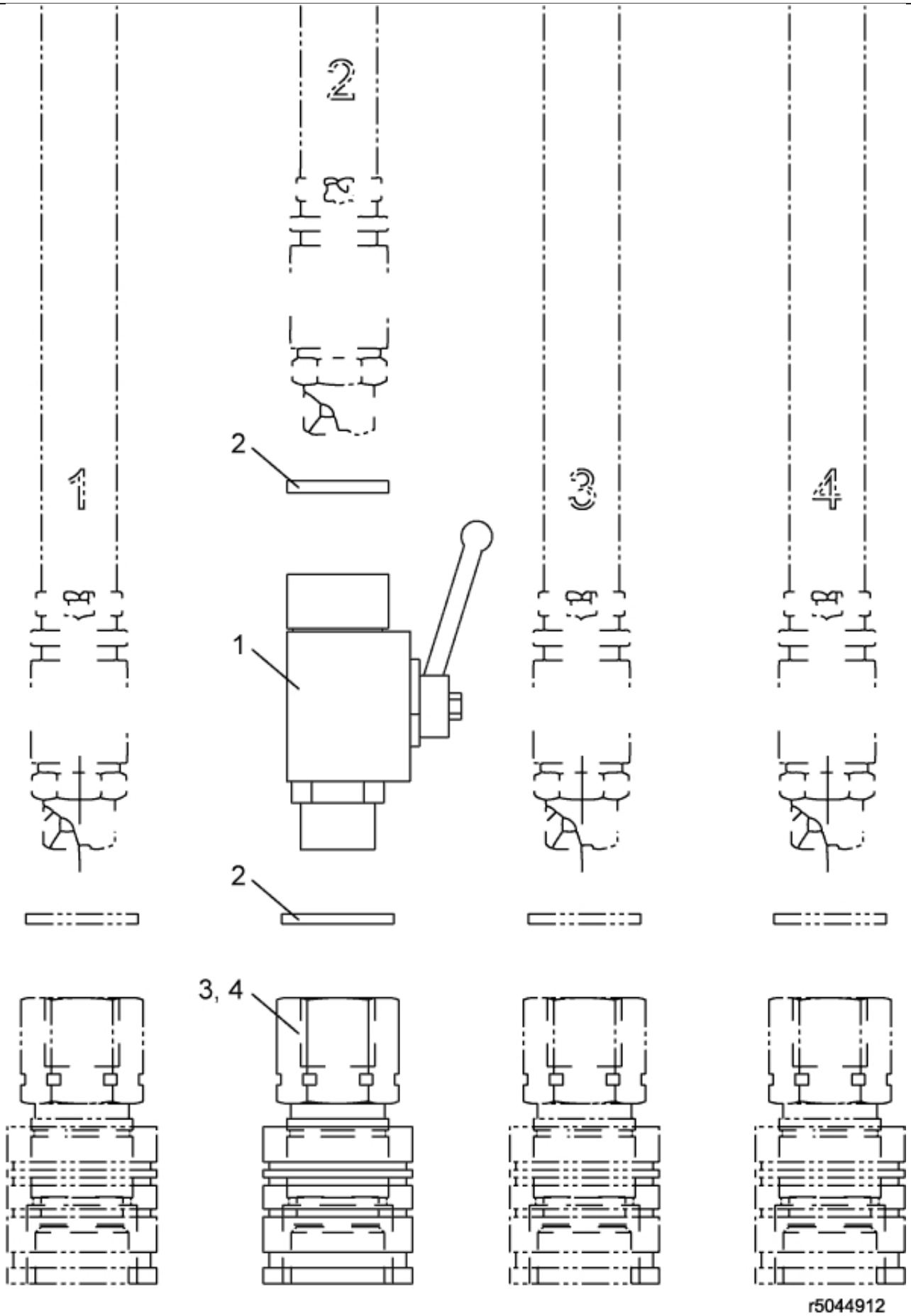

© 2025 Jost

Part assemblies Quick couplings

PartNo	Pos	Qty	Name	Specifications
4500320		1	Quick couplings	
5033898	1	1	Shut-off valve	1/2"
5013853	2	5	Dowty washer	Tredo 1/2", Part is included in kit 60007907 Hose cpl., 9032177 Hose cpl.
5044127	3	4	Quick Coupling	1/2", Part is included in kit 60007907 Hose cpl., 9032177 Hose cpl.
5044130	4	4	Dust Cover	Part is included in kit 60007907 Hose cpl., 9032177 Hose cpl.

© 2025 Jost