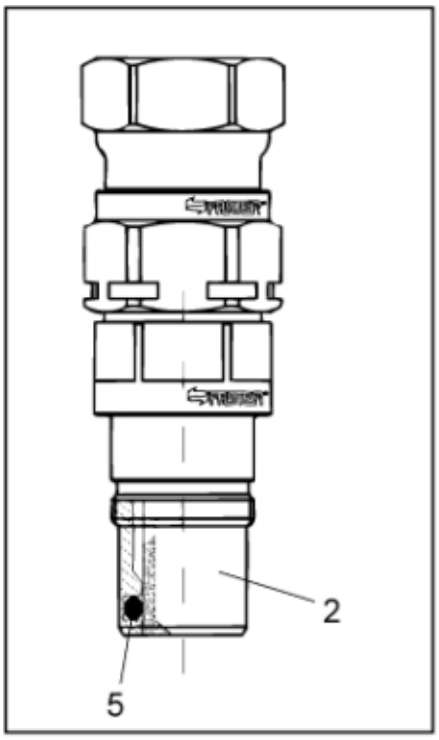

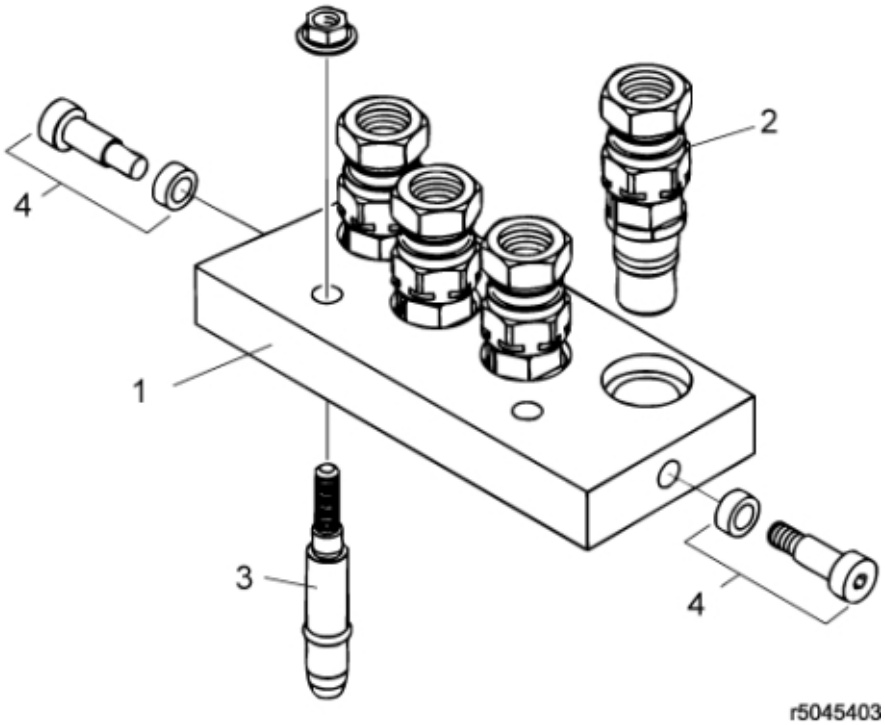

© 2025 Jost

Description	4 port QC
Part assemblies	Multi coupling, upper part
Specification	Specification: Upper part

PartNo	Pos	Qty	Name	Specifications
10301553	1	1	Upper part HQ 4	
10301569	2	4	Coupler (M)	
10301554	3	1	Dowel kit	Kit, 2 pcs
10301547	4	1	Screw kit	VP4
5045407	5	1	Seal kit	Supplied in bags of 10 pcs

© 2025 Jost