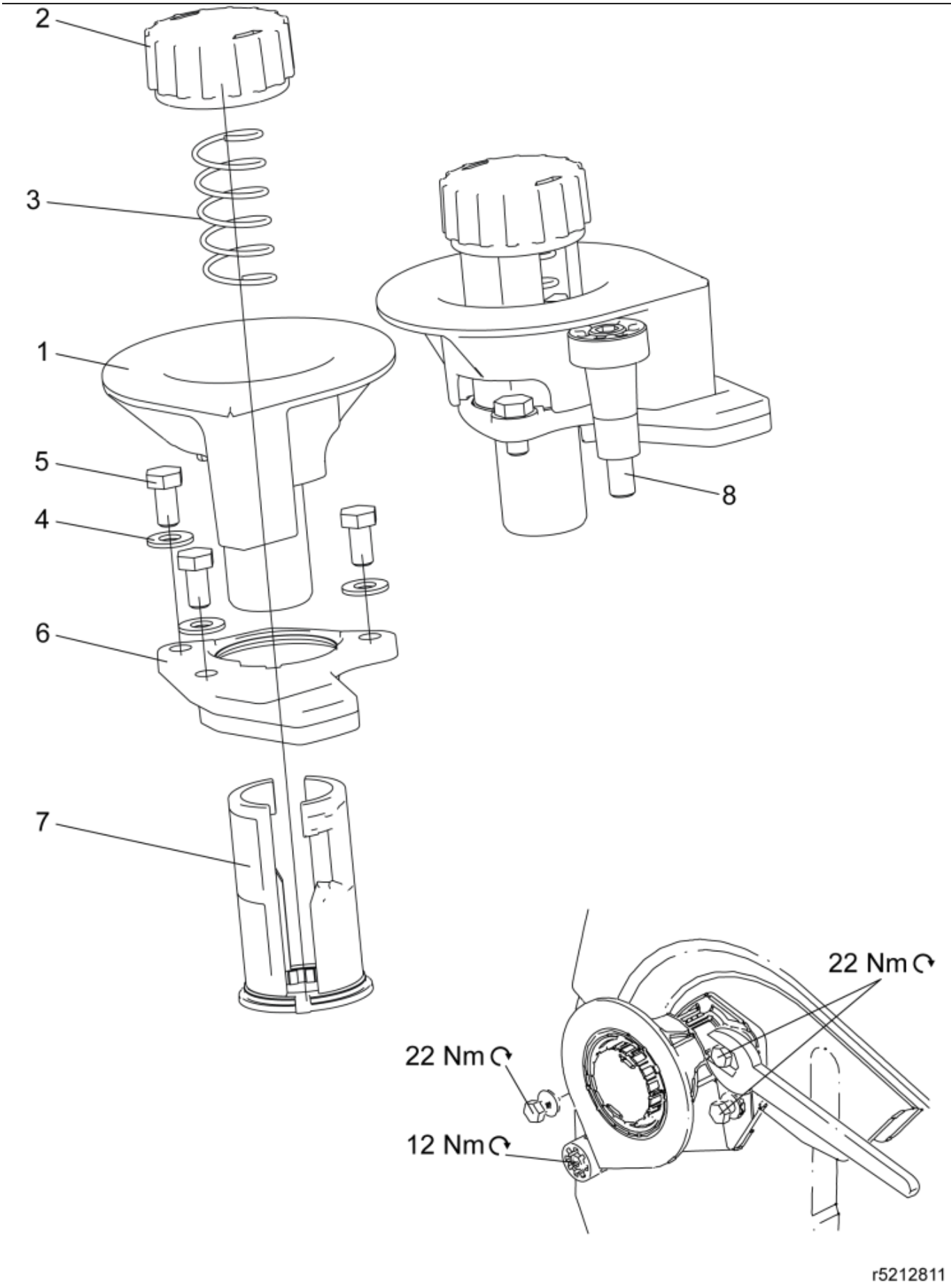

© 2025 Jost

Part assemblies	Locking kit LH
Specification	Specification: Replaced by 60008055

PartNo	Pos	Qty	Name	Specifications
5212321	1	1 PCS	Handle LH	Replaced by 60008045
5212331	2	1 PCS	Cover	Replaced by 5212305
5021915	3	1	Spring	
5013110	4	3	Washer	BRB 10.5x22x2
5002076	5	3	Screw	M6S M10 x 20 (8.8)
5212815	6	1 PCS	Plate	Replaced by 60008046
5212813	7	1 PCS	Sleeve	Replaced by 60008046
5212352	8	1 PCS	Pin kit	Replaced by 60008211

© 2025 Jost