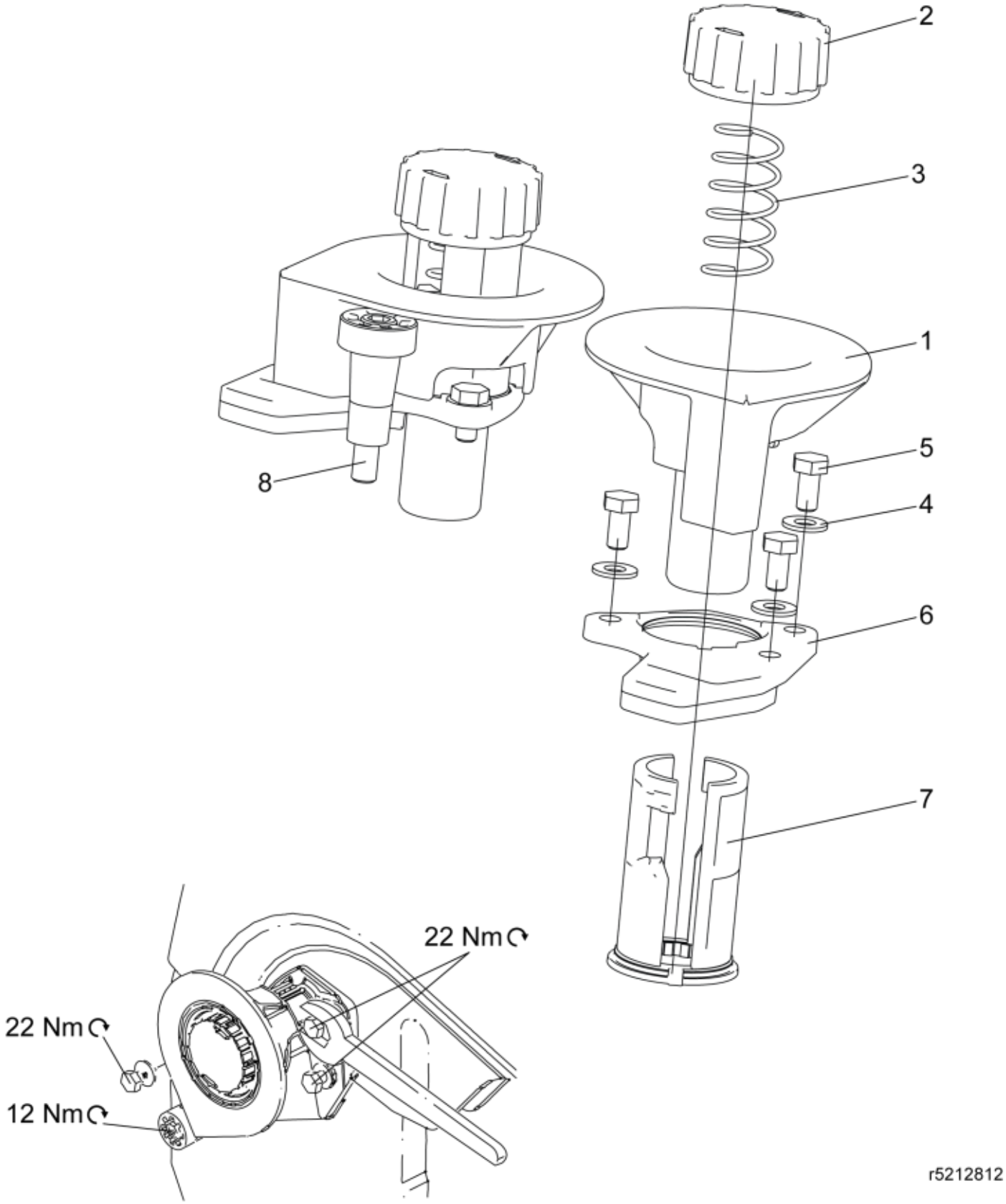

r5212812

© 2025 Jost

Description	Lock & Go
Part assemblies	Locking kit RH
Specification	Specification: Replaced by 60008053

PartNo	Pos	Qty	Name	Specifications
5212322	1	1 PCS	Handle RH	Replaced by 60008052
5212332	2	1 PCS	Cover	Replaced by 5212305
5021915	3	1	Spring	
5013110	4	3	Washer	BRB 10.5x22x2
5002076	5	3	Screw	M6S M10 x 20 (8.8)
5212816	6	1 PCS	Plate	Replaced by 60008047
5212814	7	1 PCS	Sleeve	Replaced by 60008047
5212352	8	1 PCS	Pin kit	Replaced by 60008211

© 2025 Jost