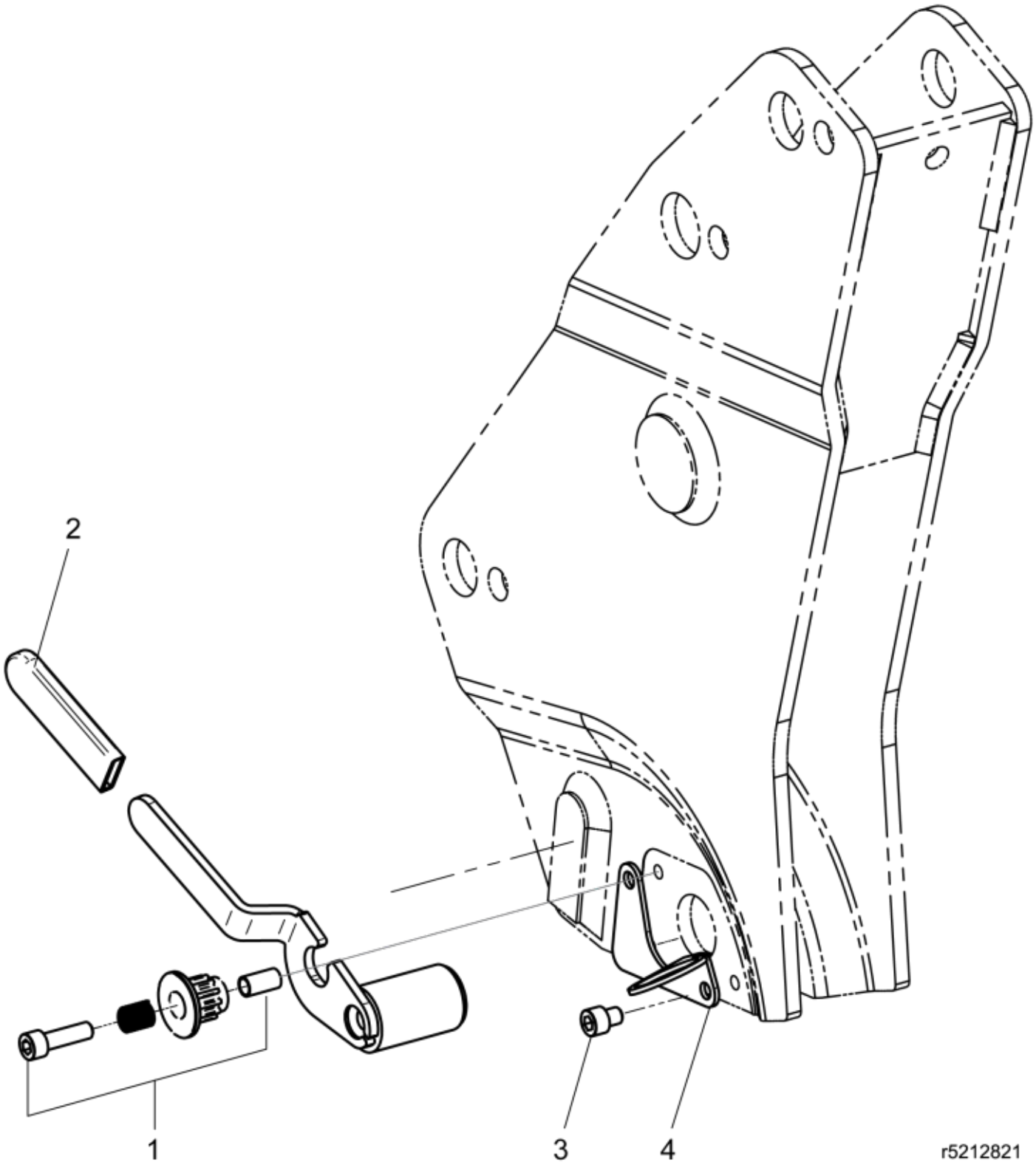

© 2025 Jost

Part assemblies	Locking kit LH

PartNo	Pos	Qty	Name	Specifications
5212823	1	1	Knob kit	
20719363	2	1	Handle	719363
5004921	3	1	Screw	MC6S 10x12
5212325	4	1	Bracket LH	

© 2025 Jost