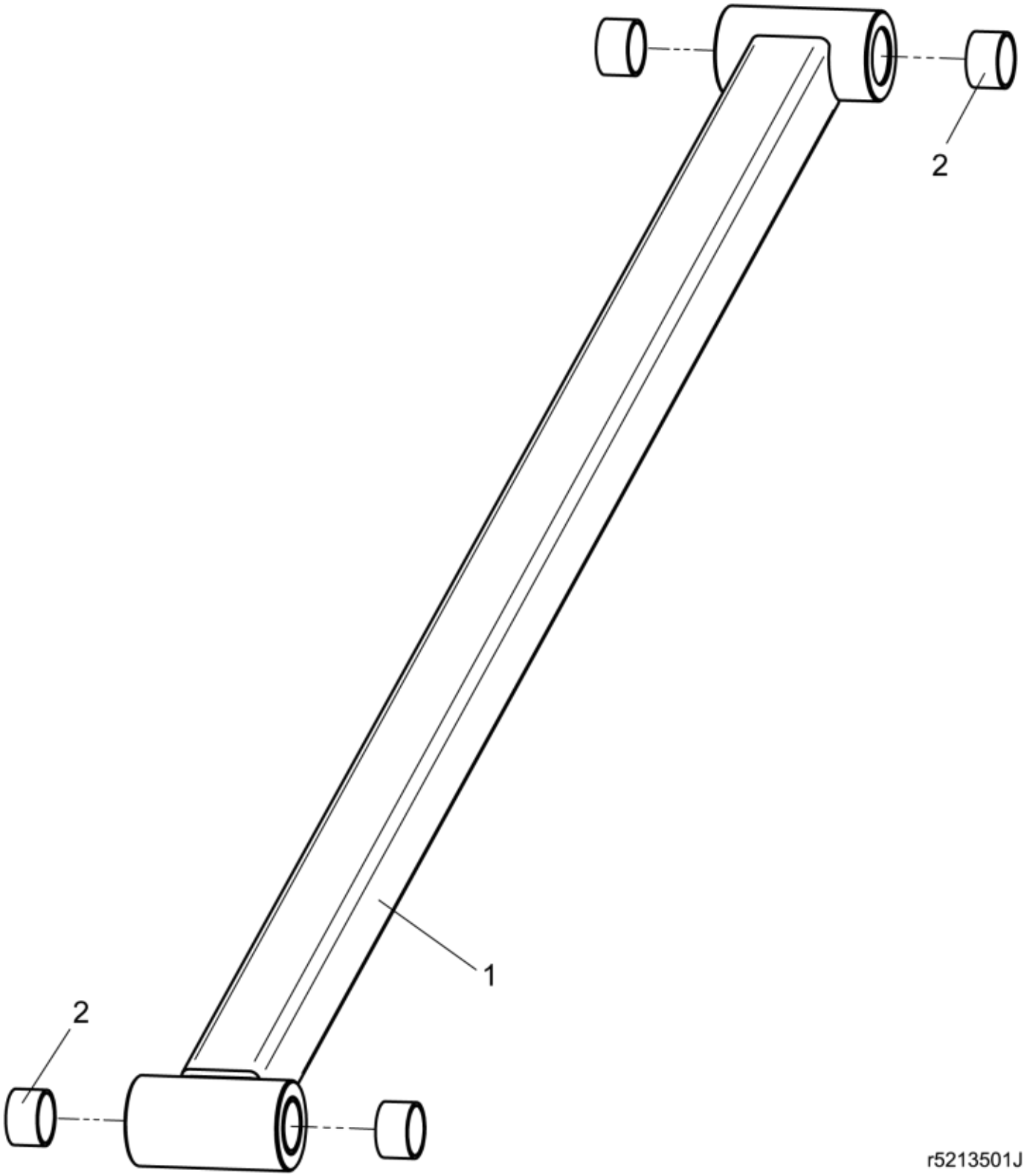

© 2025 Jost

Part assemblies	Parallel rod w. bushings
Specification	Specification: Glossy Black. Replaces 5213503

PartNo	Pos	Qty	Name	Specifications
5220703-1	1	1	Parallel rod w. bushings	Glossy Black. Replaces 5213503
5018515	2	4	• Bushing	D30 L=20

© 2025 Jost