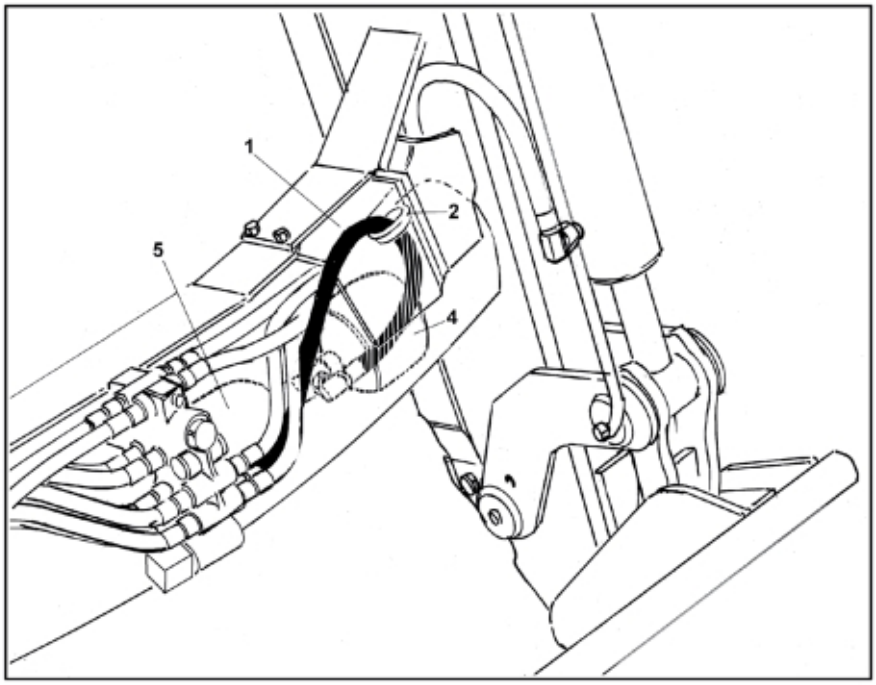
1
2
5
4

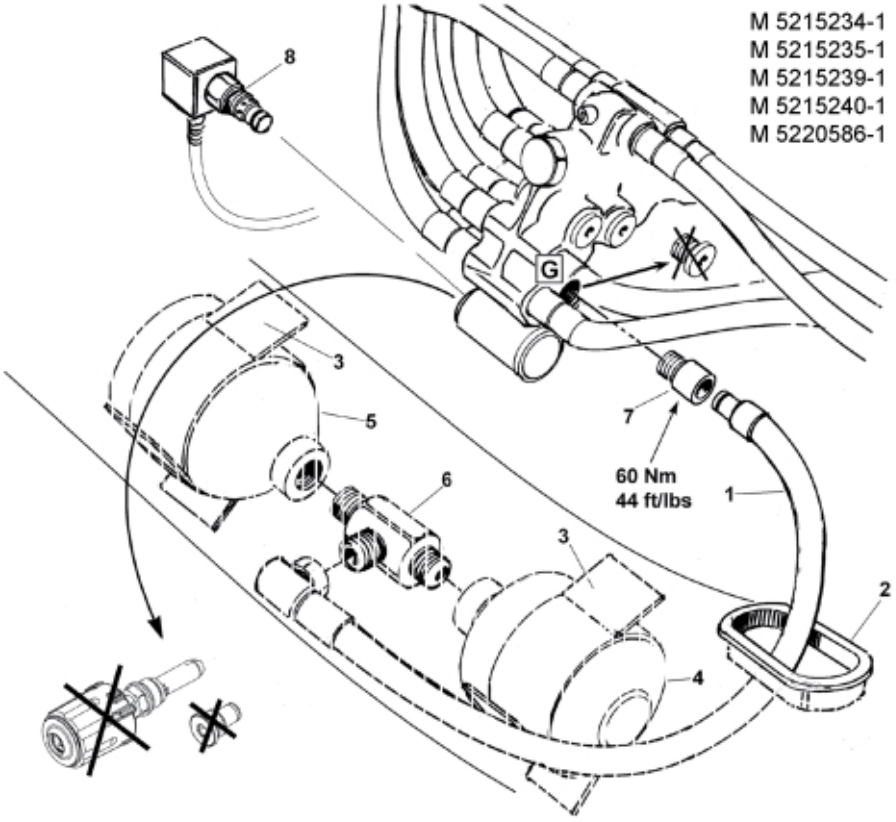
M 5215234-1
M 5215235-1
M 5215239-1
M 5215240-1
M 5220586-1
8
G
3
5
7
60 Nm
44 ft/lbs
1
6
3
2
4

© 2025 Jost

M 5215234-2
M 5215235-2
M 5215239-2
M 5215240-2
M 5220586-2

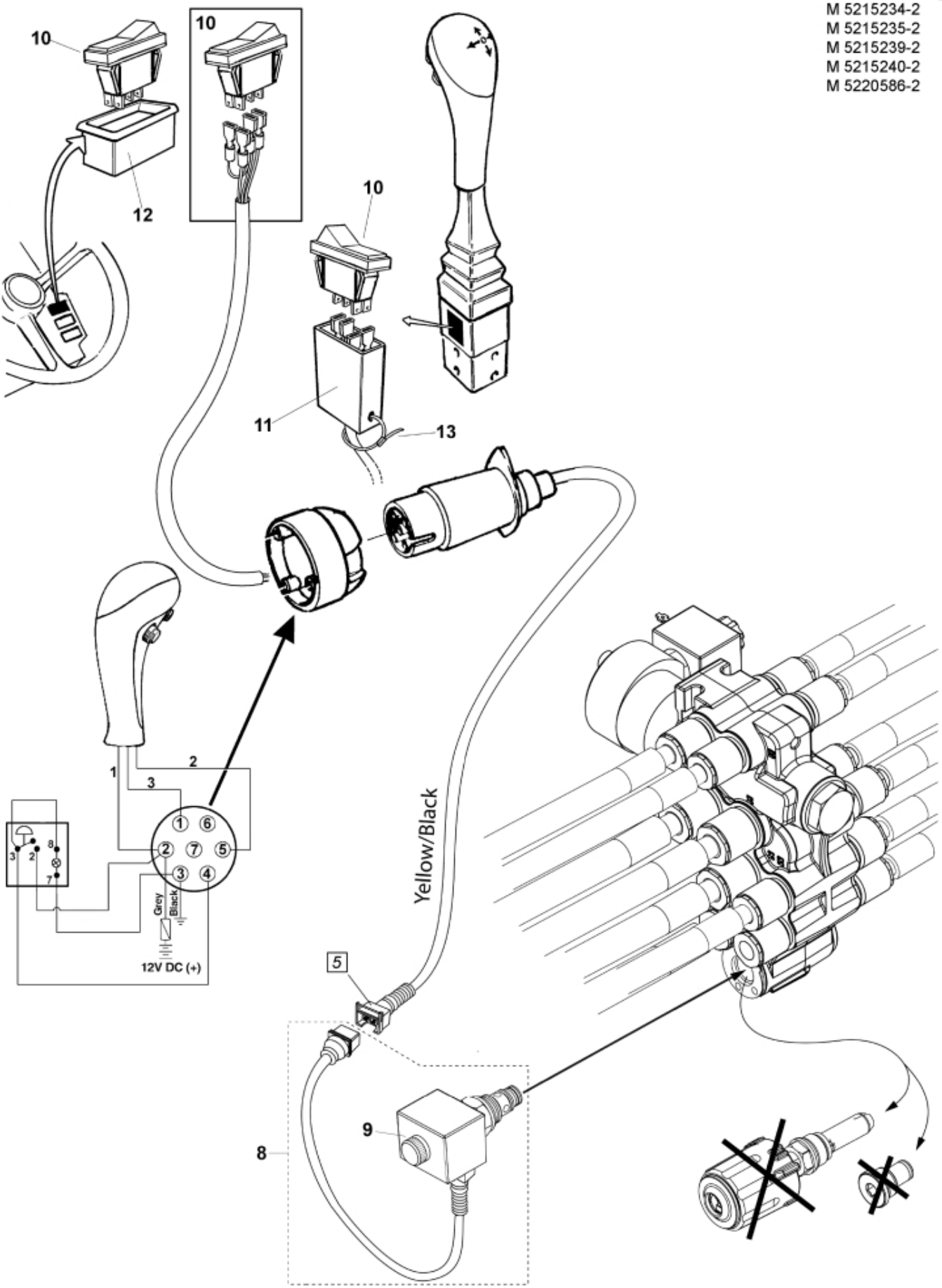

© 2025 Jost

Description	2 acc
Part assemblies	Suspension El.
Specification	Serial number to: 7332743

PartNo	Pos	Qty	Name	Specifications
5215234		1 PCS	Suspension El.	7332743
9031147	1	1	Hose	3/8" L=800mm
5215111	2	1	Edge cover	
5215012	3	2	Bracket	
5033773	4	1	Accumulator	0,5L/22Bar
5034102	5	1	Accumulator	
11120516	6	1	T-Adapter	
9031324	7	1	Coupling	3/8"
10550264	8	1 PCS	Valve cpl.	
60062558	9	1 PCS	• Coil	
5201082	10		Switch	
5201086	11	1	Bracket	
5103005	12		Frame	
5033621	13	10	Cable tie	4.6x150

© 2025 Jost