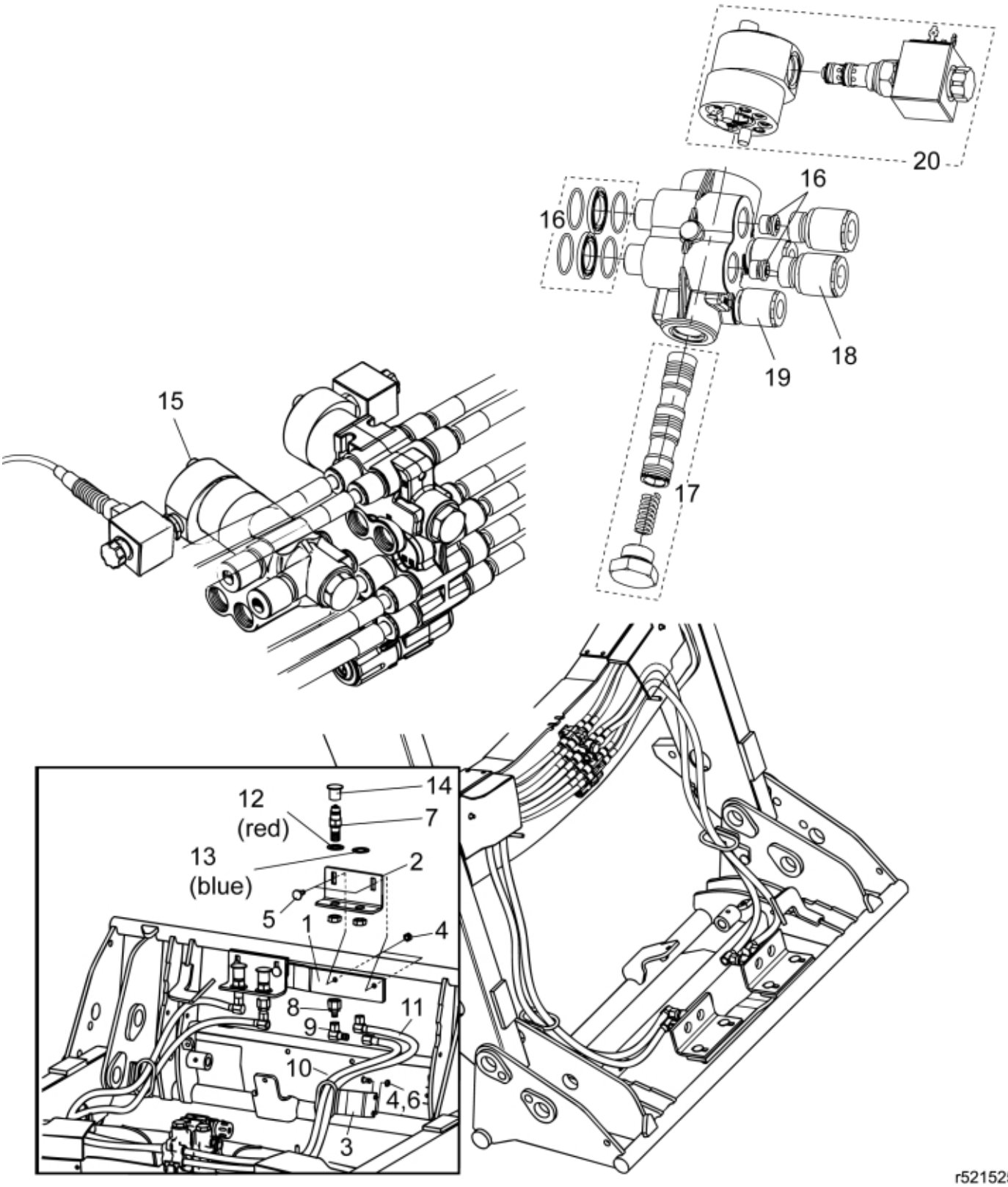

© 2025 Jost

Part assemblies	4th service	
Specification	Serial number to: 7234199	

PartNo	Pos	Qty	Name	Specifications
5215253		1 PCS	4th service	7234199
5219189	1	1 PCS	Bracket Extension	
5219187	2	1 PCS	Bracket	
5219183	3	1	Hose guide	
5011554	4	6	Nut	Loc-King M10
5006003	5	2	Screw	MVBF 10x40
5006002	6	4	Screw	MVBF 10x30
5044915	7	2	Coupling	
5027827	8	1 PCS	Adaptor	
1120099	9	1	Adaptor	3/8" BSP 90°
9031163	10	1 PCS	Hose	3/8"
9031162	11	1 PCS	Hose	3/8"
5022157	12	1	Washer, red	
5022159	13	1	Washer, blue	
5044129	14	2	Dust Cover	1/2" Male
10550260	15	1 PCS	Diverter valve	
10550328	16	1 PCS	• Sealing Set	
10550321	17	1	• Spool kit	
9031325	18	2	• Coupling	1/2"
9031324	19	2	• Coupling	3/8"
10550265	20	1 PCS	• Servo block cpl.	

© 2025 Jost