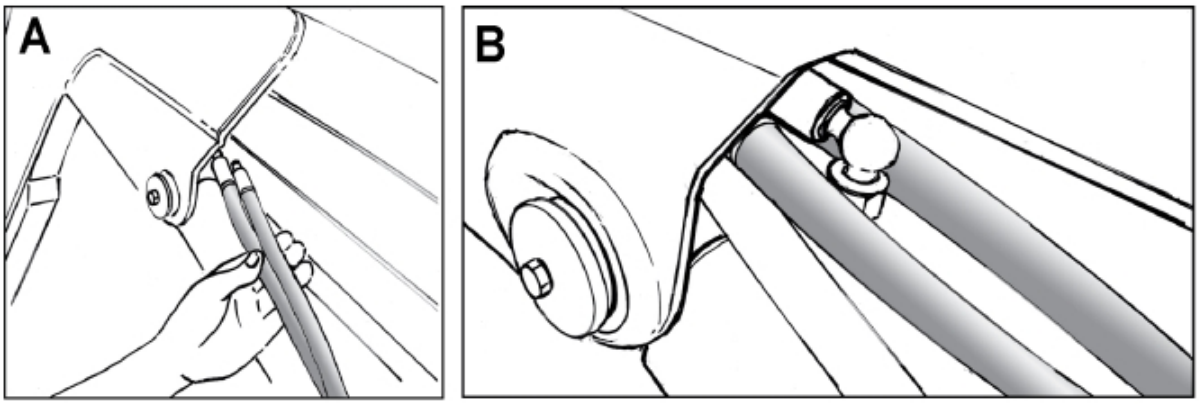

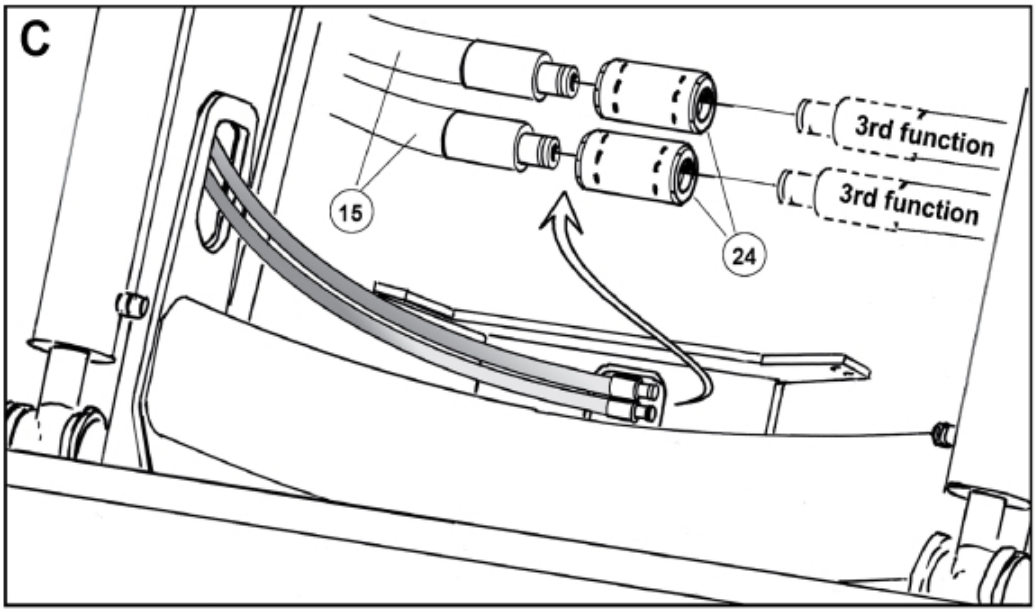

M 5215270-1

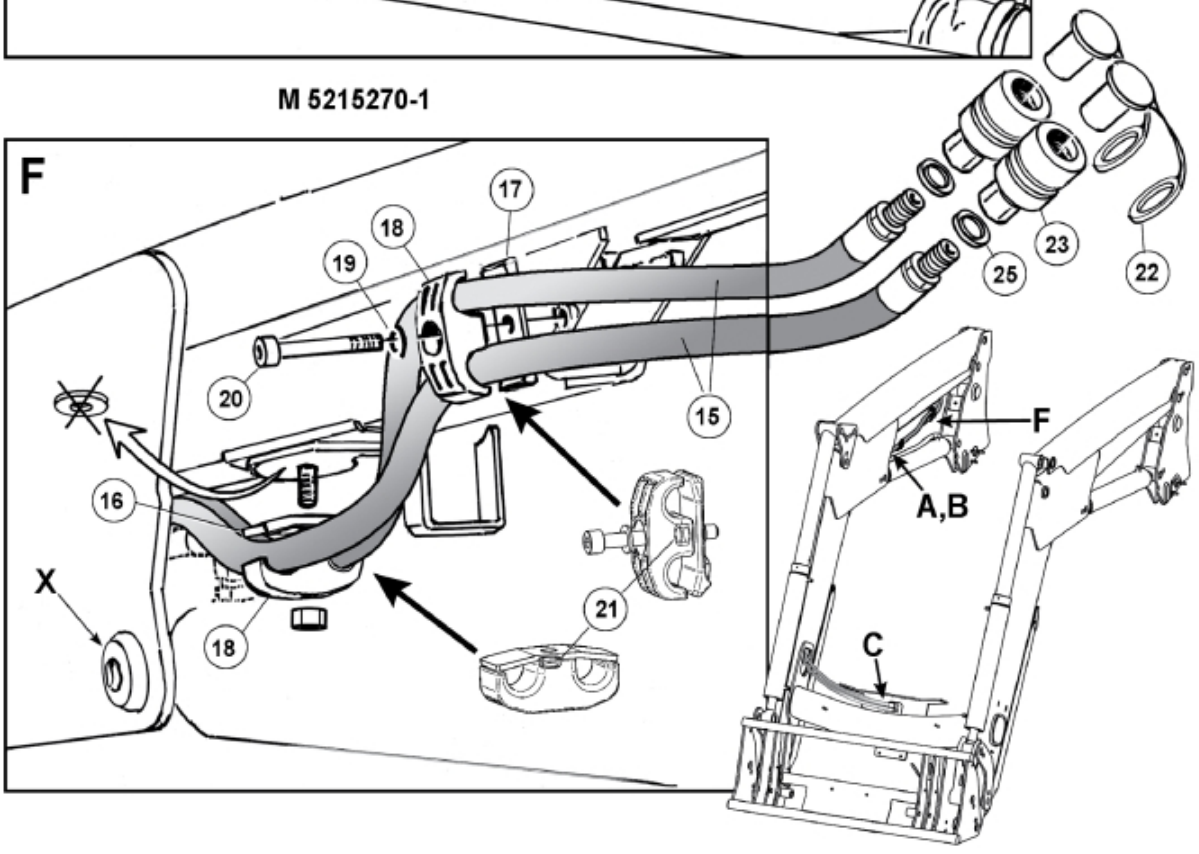

© 2025 Jost

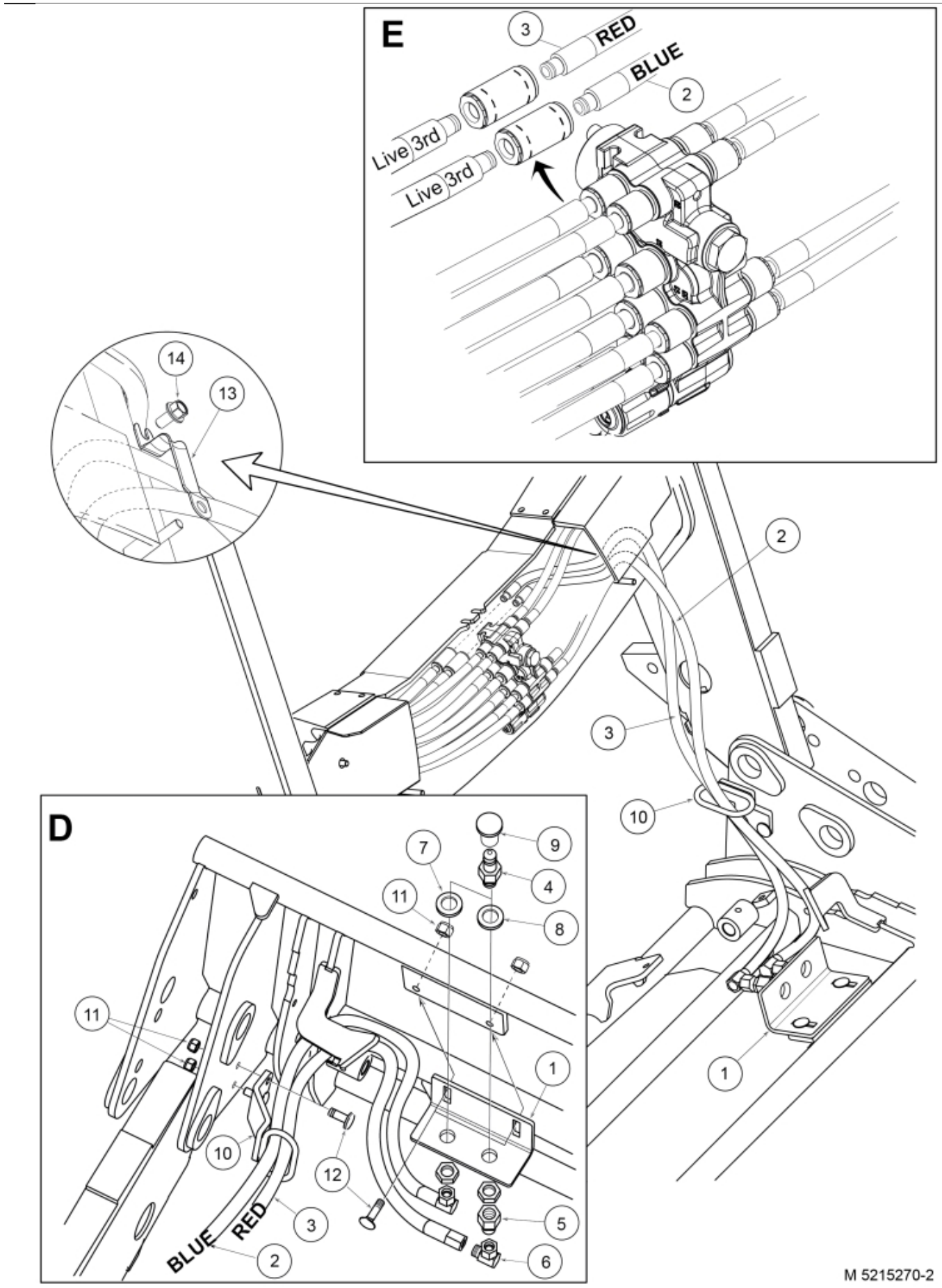
E
3
RED
BLUE
2
Live 3rd
Live 3rd
14
13
2
3
10
D
7
9
4
11
8
11
1
10
12
5
3
BLUE
RED
2
6
1
M 5215270-2

© 2025 Jost

Part assemblies	Live 3rd
Specification	Serial number to: 7234200

PartNo	Pos	Qty	Name	Specifications
5215291		1	Live 3rd	7234200
5219187	1	1 PCS	Bracket	
9032633	2	1 PCS	Hose	3/8" L=1150mm (9031150)
9032694	3	1 PCS	Hose	3/8" L=1200mm (9031151)
5044915	4	2	Coupling	
5027827	5	1 PCS	Adaptor	
1120099	6	1	Adaptor	3/8" BSP 90°
5022159	7	1	Washer, blue	
5022157	8	1	Washer, red	
5044129	9	2	Dust Cover	1/2" Male
5219183	10	1	Hose guide	
5011554	11	4	Nut	Loc-King M10
5006002	12	4	Screw	MVBF 10x30
5215066	13	1 PCS	Hose guide	
5006007	14	1 PCS	Screw	M6SF-TT M8X16
9032616	15	2 PCS	Hose	3/8" L=3300mm (9031487)
5220148	16	1 PCS	Plate	
5215163	17	1 PCS	Hose clamp bracket	
5215161	18	2 PCS	Hose clamp	
5013101	19	1	Washer	BRB 8,4 x 16
5004055	20	1	Screw	MC6S 8x70
5215162	21	2	Sleeve	Not Sold Separately
5044130	22	2	Dust Cover	Part is included in kit 60007907 Hose cpl., 9032177 Hose cpl.
5044127	23	2	Quick Coupling	1/2", Part is included in kit 60007907 Hose cpl., 9032177 Hose cpl.
5027986	24	2 PCS	Adaptor	
5013853	25	2	Dowty washer	Tredo 1/2", Part is included in kit 60007907 Hose cpl., 9032177 Hose cpl.
5034121	26	1	Protection sleeve	

© 2025 Jost