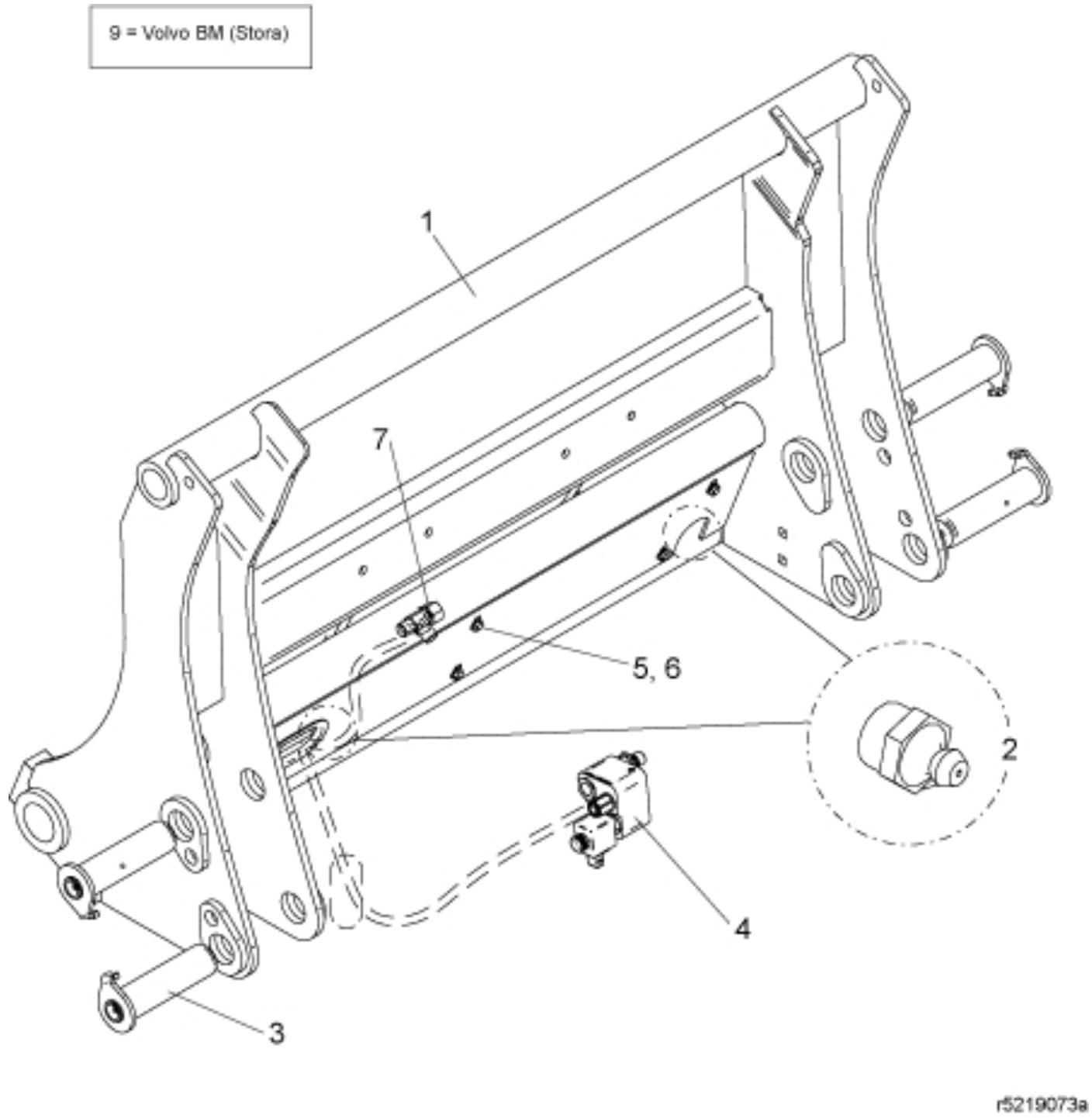

© 2025 Jost

Description	Tool carrier
Part assemblies	Big BM
Specification	Specification: Grey

PartNo	Pos	Qty	Name	Specifications
5219063-7		1 PCS	Big BM	Grey
5219064-7	1	1 PCS	Tool carrier	Grey
5023005	2	2	Greaser	M 10 x 1
60021068	3	1 PCS	Pin kit	Replaces 9020072
10550456	4	1 PCS	Valve	
5002051	5	6	Screw	M6S 8 x 20
5013101	6	6	Washer	BRB 8,4 x 16
5027454	7	1	L-coupling	

© 2025 Jost