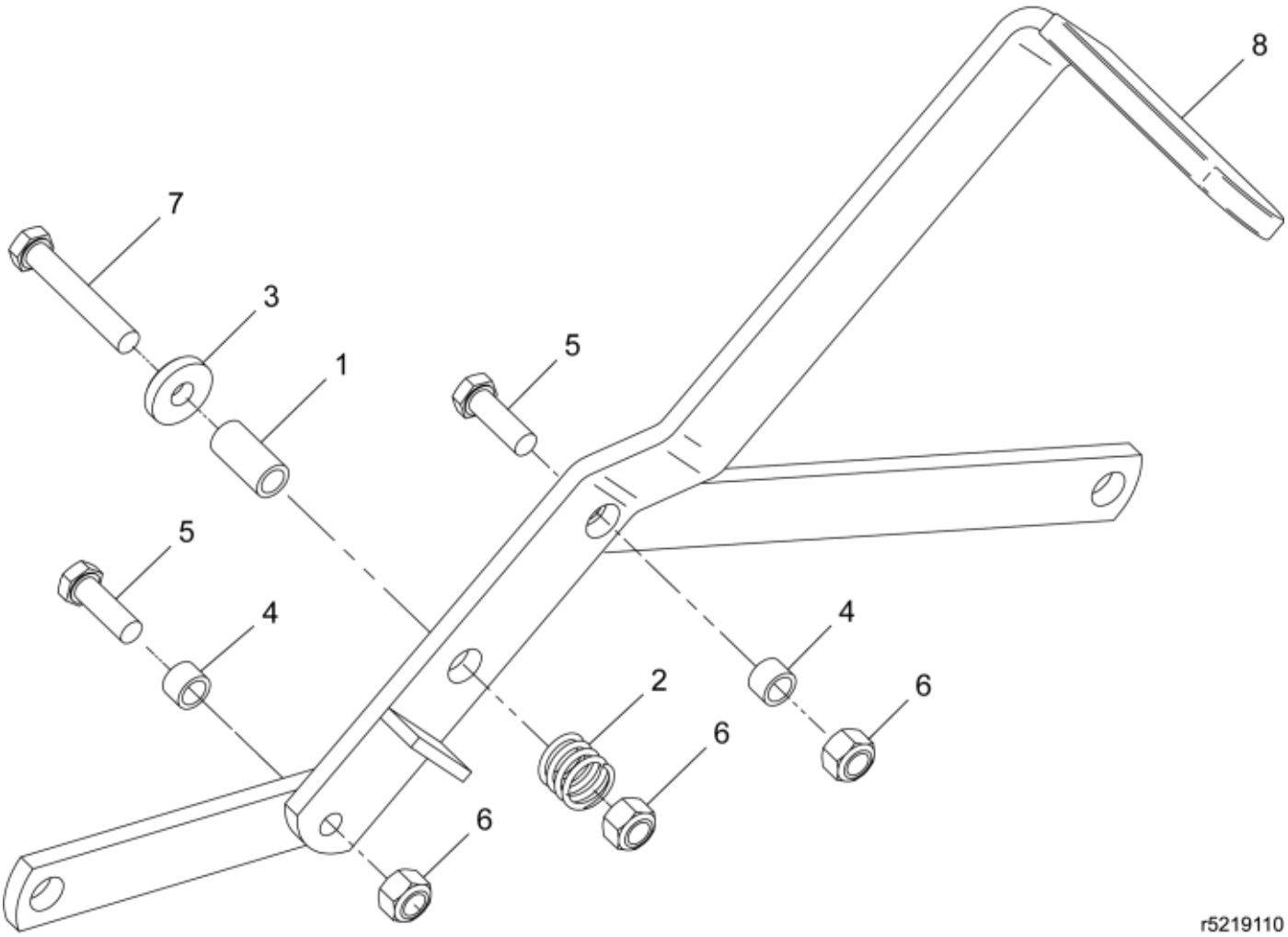

© 2025 Jost

Part assemblies Lever kit

PartNo	Pos	Qty	Name	Specifications
5220271	1	1 PCS	Spacer	
5021940	2	1 PCS	Spring	
5013177	3	1	Washer	TBRSB 10.5x28x6
5219100	4	2	Spacer	
5002077	5	2	Screw	M6S 10x30
5011554	6	3	Nut	Loc-King M10
5002080	7	1	Screw	M6S 10 x 60
5022144	8	1	Cover	

© 2025 Jost