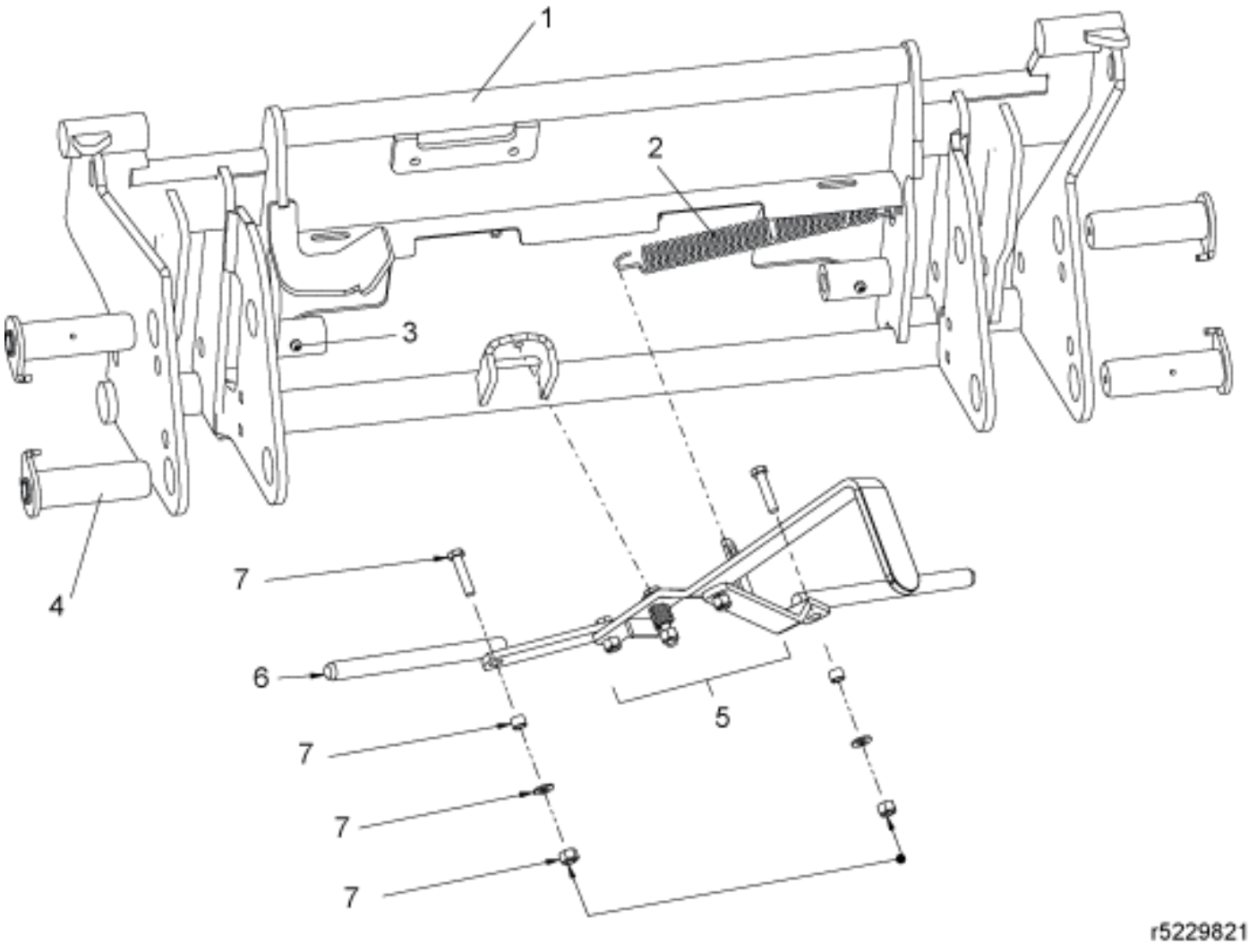

© 2025 Jost

Description	Tool carrier
Part assemblies	Euro/Alo Type 3
Specification	Specification: Grey

PartNo	Pos	Qty	Name	Specifications
5229821-7		1 PCS	Euro/Alo Type 3	Grey
5229824-7	1	1 PCS	Tool carrier	Grey
1101035	2	1	Spring	
5023005	3	2	Greaser	M 10 x 1
60021067	4	1	Pin kit	Replaces 9020071
5220341	5	1	Lever kit	
4500865	6	2	Pin kit	Includes 4500867
4500867	7	2	• Screw kit	Included in Pin kit

© 2025 Jost