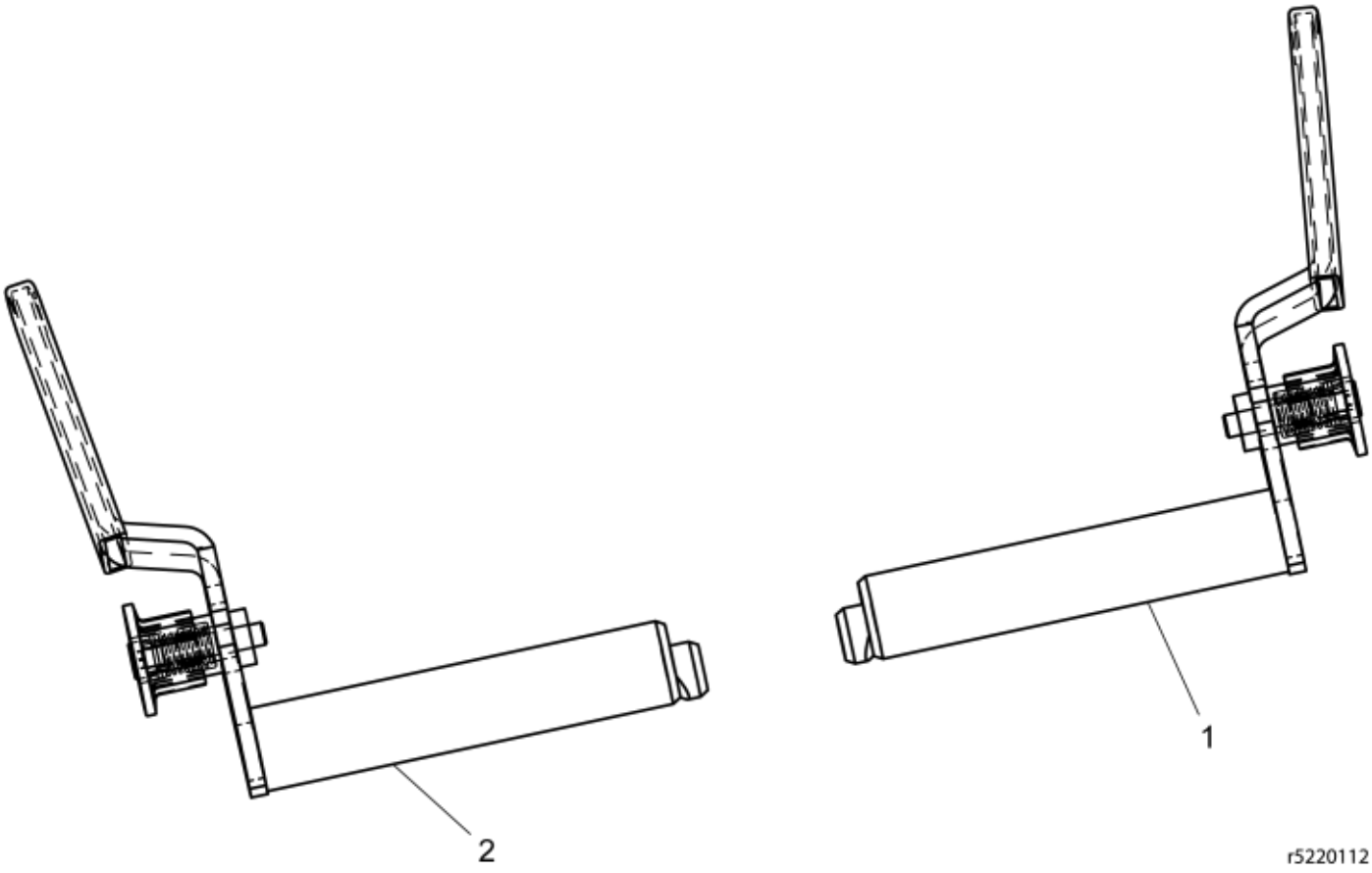



© 2025 Jost

**Part assemblies** Locking kit

| PartNo | Pos | Qty | Name | Specifications |
|---|---|---|---|---|
| 5220112 | | 1 | Locking kit | |
| 5220115 | 1 | 1 | Locking kit LH | |
| 5220116 | 2 | 1 | Locking kit RH | |


© 2025 Jost