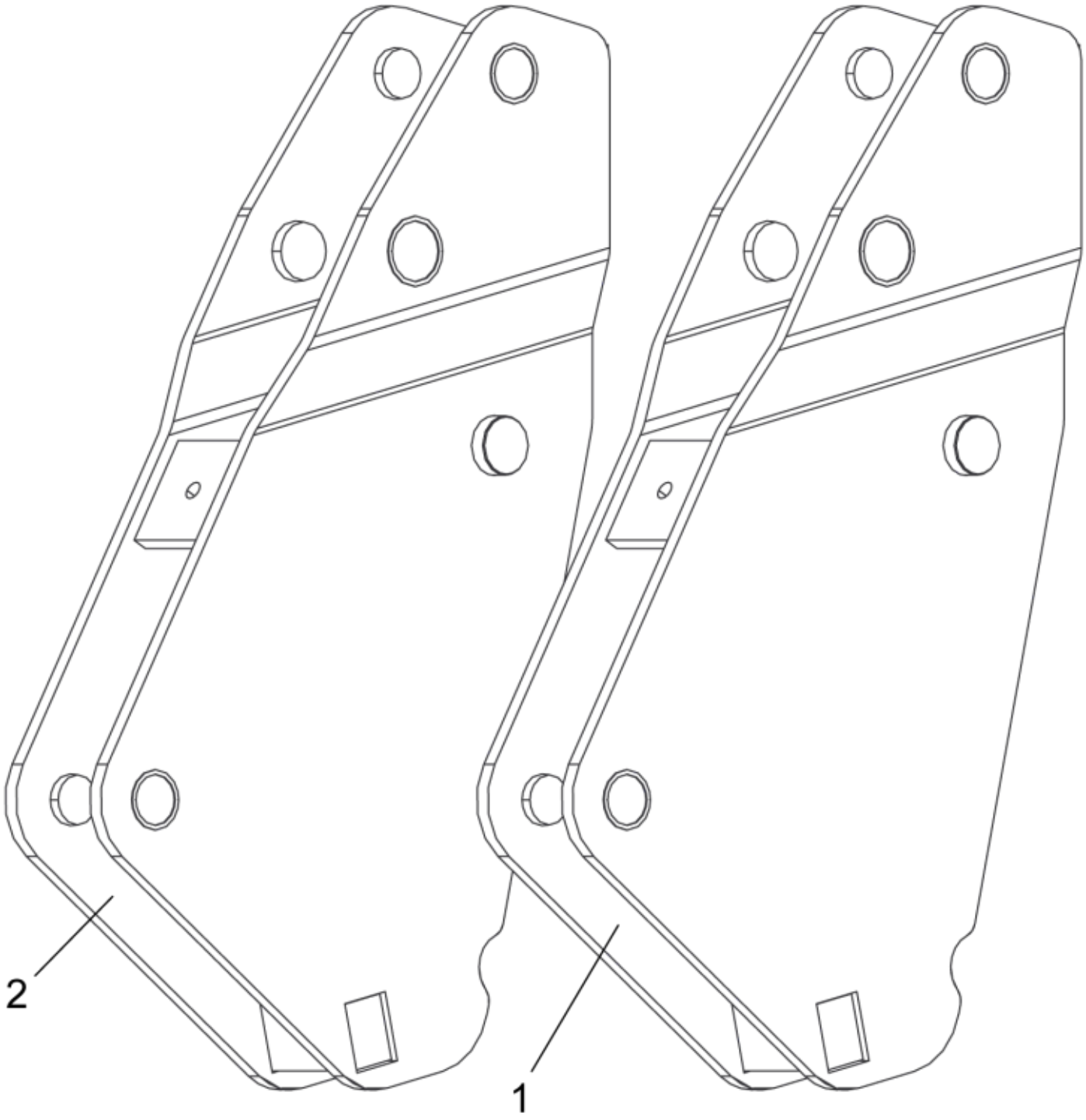

r5220192

© 2025 Jost

Part assemblies	Bearing boxes
Specification	Specification: Grey

PartNo	Pos	Qty	Name	Specifications
5212551-7	1	1	Bearing box RH/LH	Grey
5212551-7	2	1	Bearing box RH/LH	Grey

© 2025 Jost