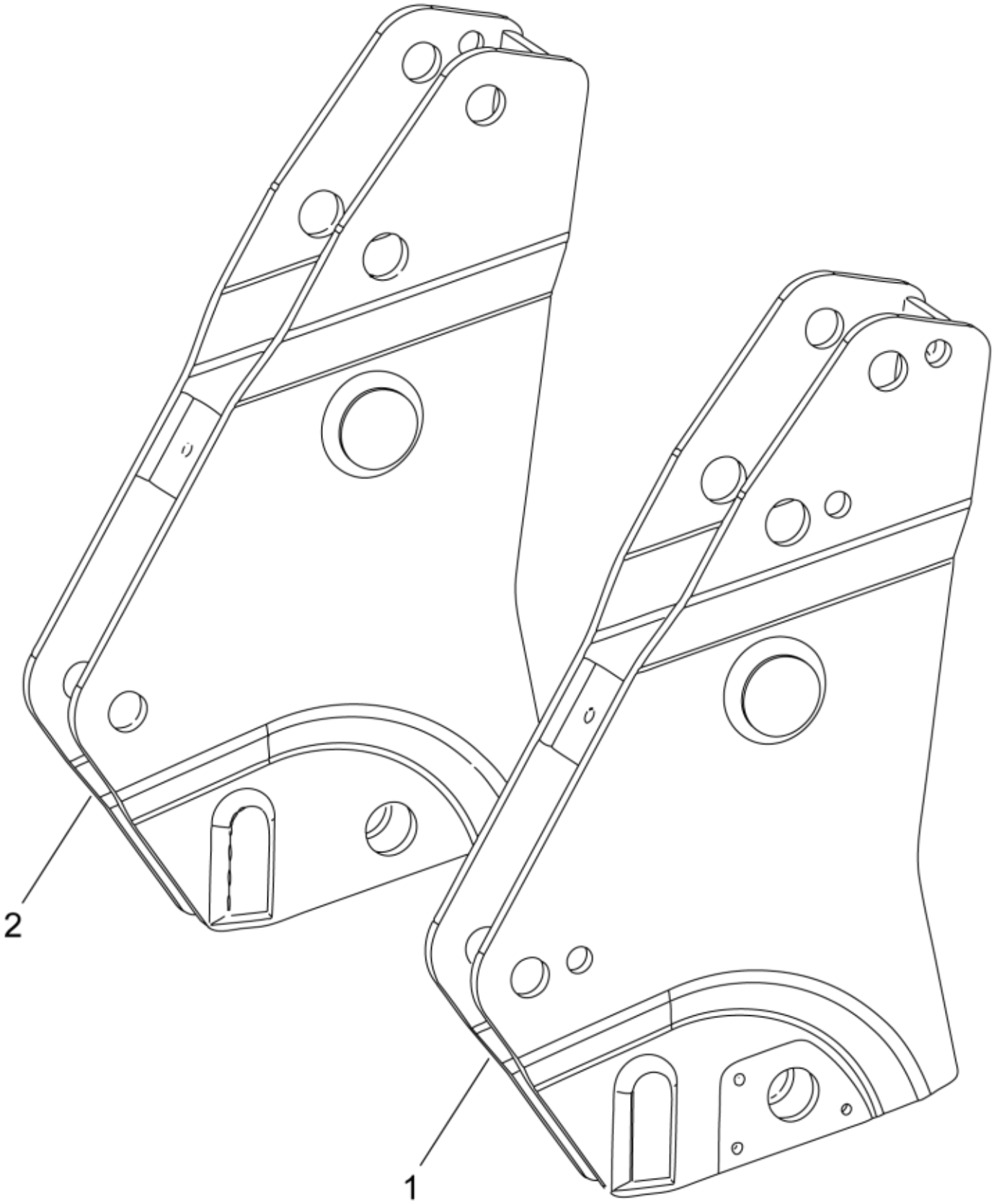

r5212513_5212523

© 2025 Jost

Part assemblies	Bearing boxes
Specification	Specification: Grey

PartNo	Pos	Qty	Name	Specifications
5212511-7	1	1	Bearing box LH	Grey
5212521-7	2	1	Bearing box RH	Grey

© 2025 Jost