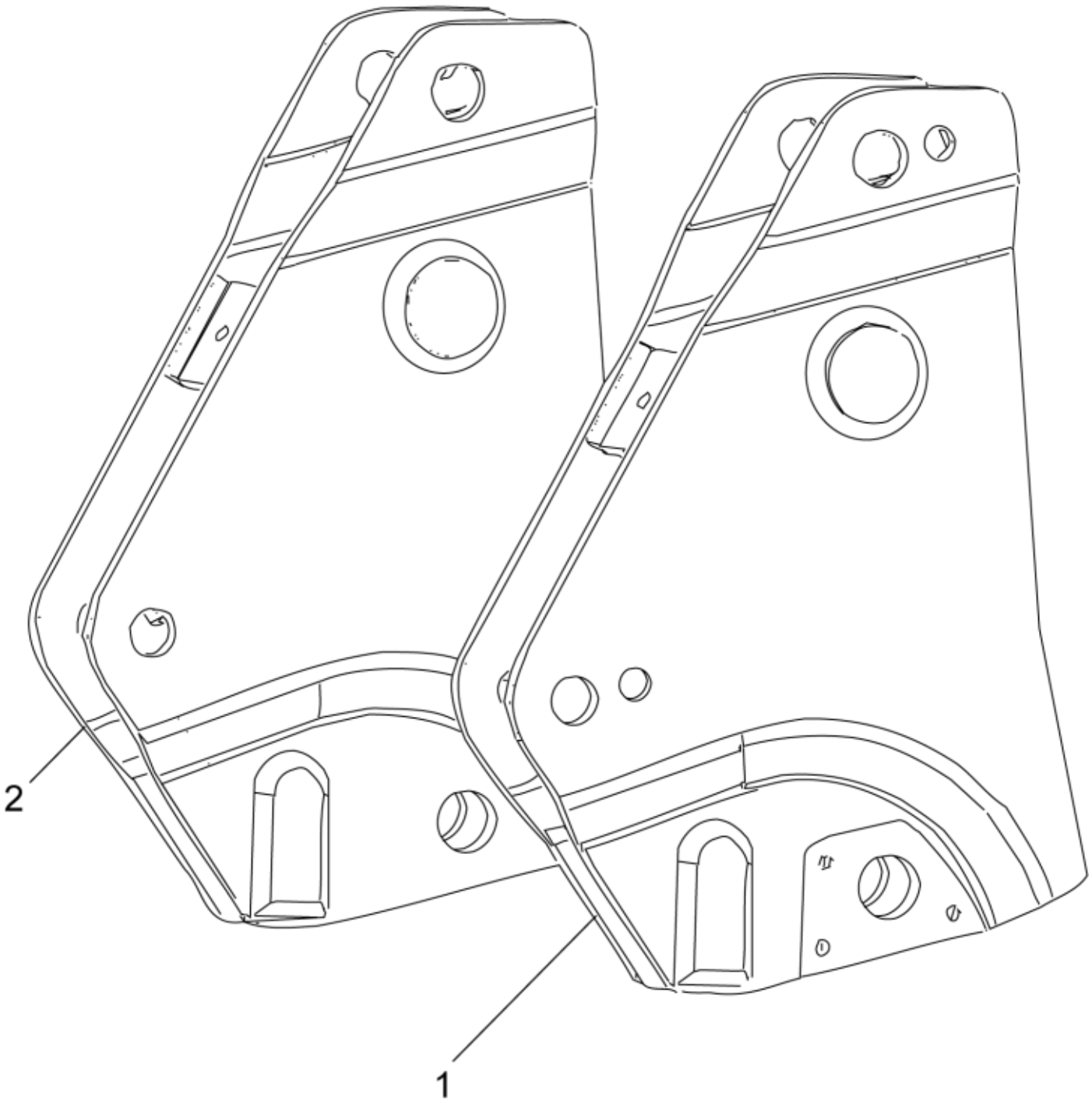

r5212514_5212524

© 2025 Jost

Part assemblies		Bearing boxes		
Specification		Specification: Grey		
PartNo	**Pos**	**Qty**	**Name**	**Specifications**
5220209-7		1	Bearing boxes	Grey
5212510-7	1	1	• Bearing box LH	Grey
5212520-7	2	1	• Bearing box RH	Grey

© 2025 Jost