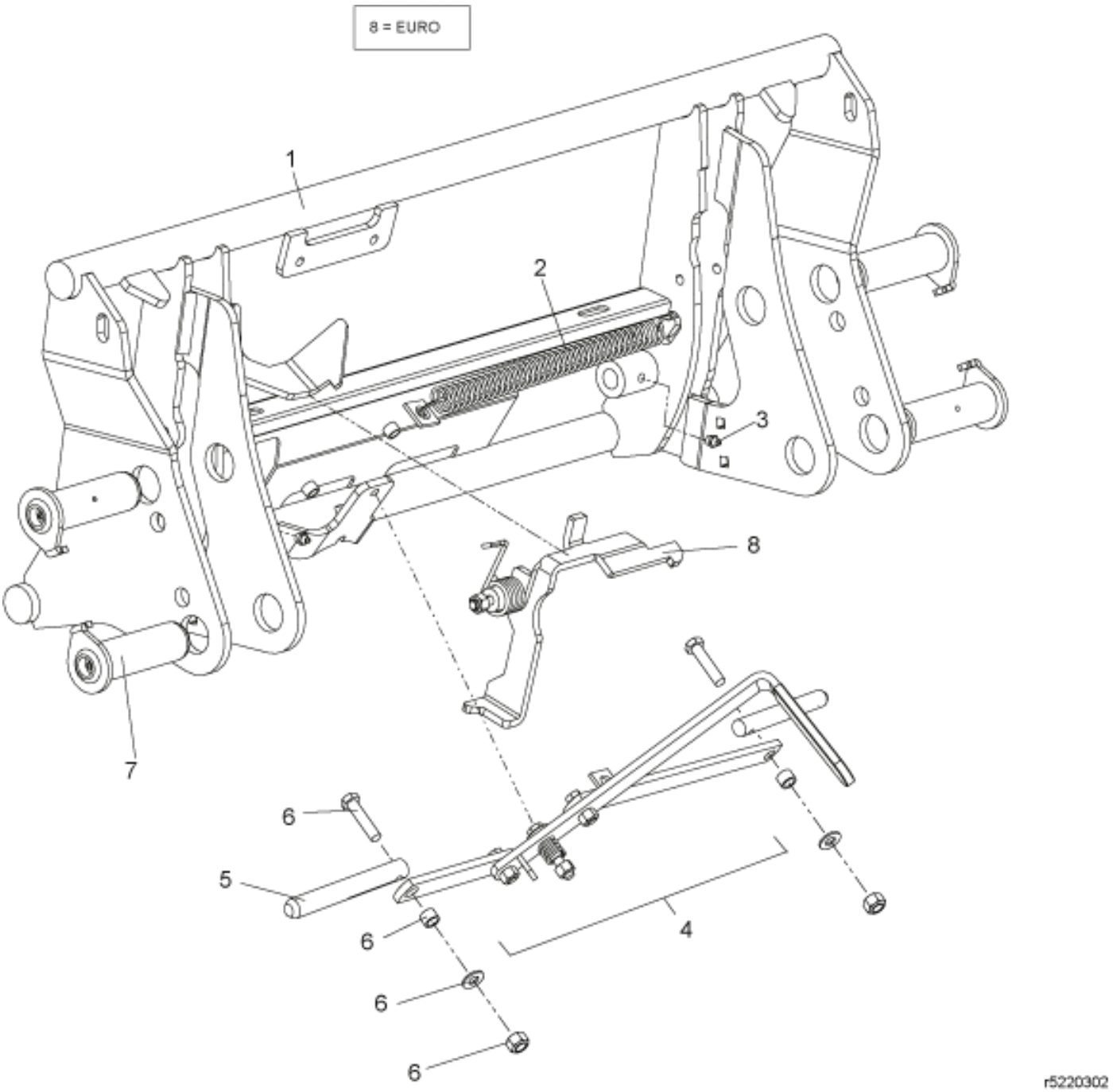

© 2025 Jost

Description	Tool carrier
Part assemblies	Euro
Specification	Specification: Grey

PartNo	Pos	Qty	Name	Specifications
5220302-7		1 PCS	Euro	Grey
5220286-7	1	1 PCS	Tool carrier	Grey
1101035	2	1	Spring	
5023005	3	2	Greaser	M 10 x 1
5220265	4	1	Lever kit	
4500859	5	2	Pin kit	Kit includes 1x Pin and 1x Screw kit
4500867	6	2	• Screw kit	Included in Pin kit
60021067	7	1	Pin kit	Replaces 9020071
4500321	8	1	Click-on	

© 2025 Jost