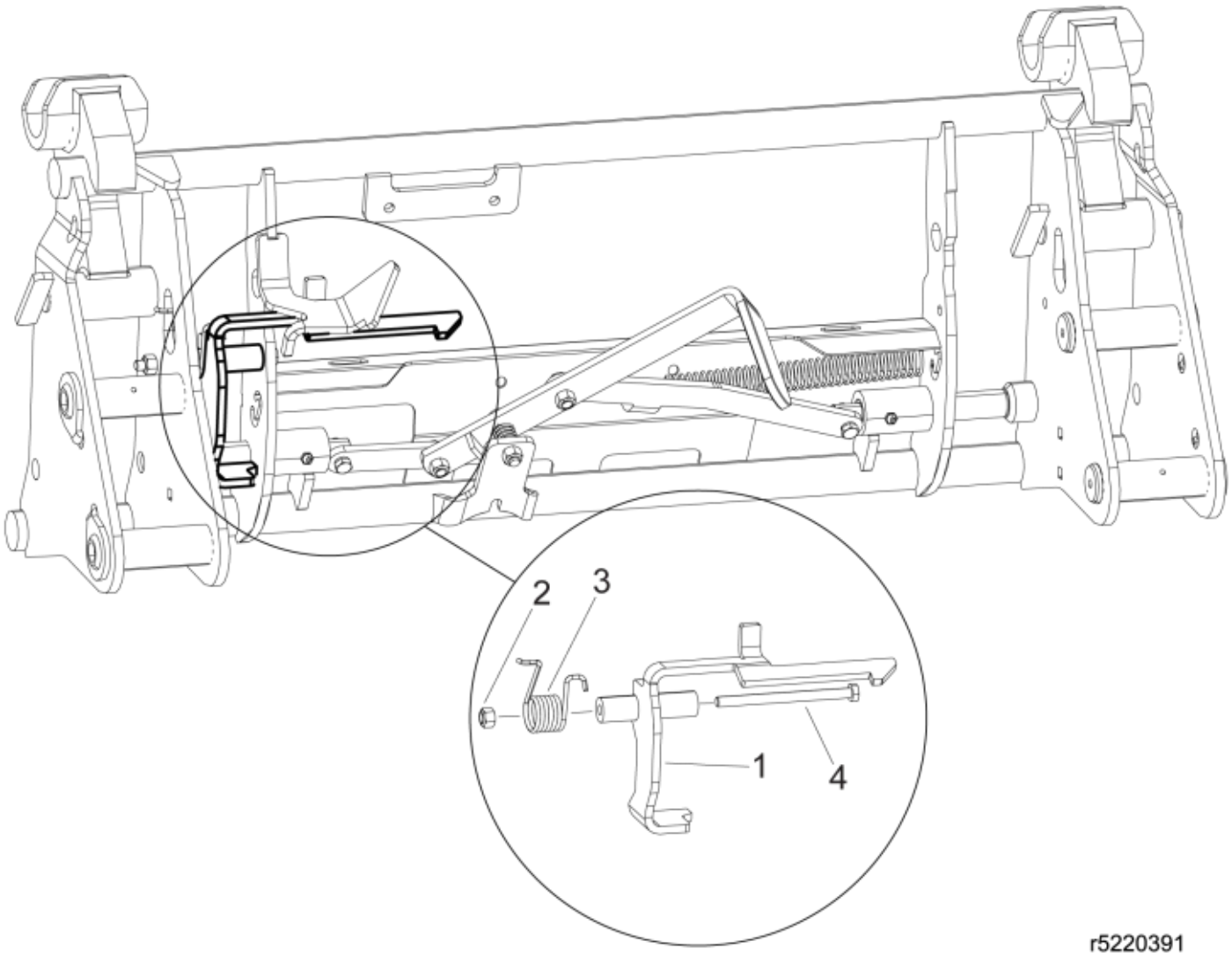

© 2025 Jost

Part assemblies	Click-on

PartNo	Pos	Qty	Name	Specifications
5220391	1	1	Link	
5011554	2	1	Nut	Loc-King M10
5021941	3	1 PCS	Spring	
5002085	4	1	Screw	M6S 10x140

© 2025 Jost