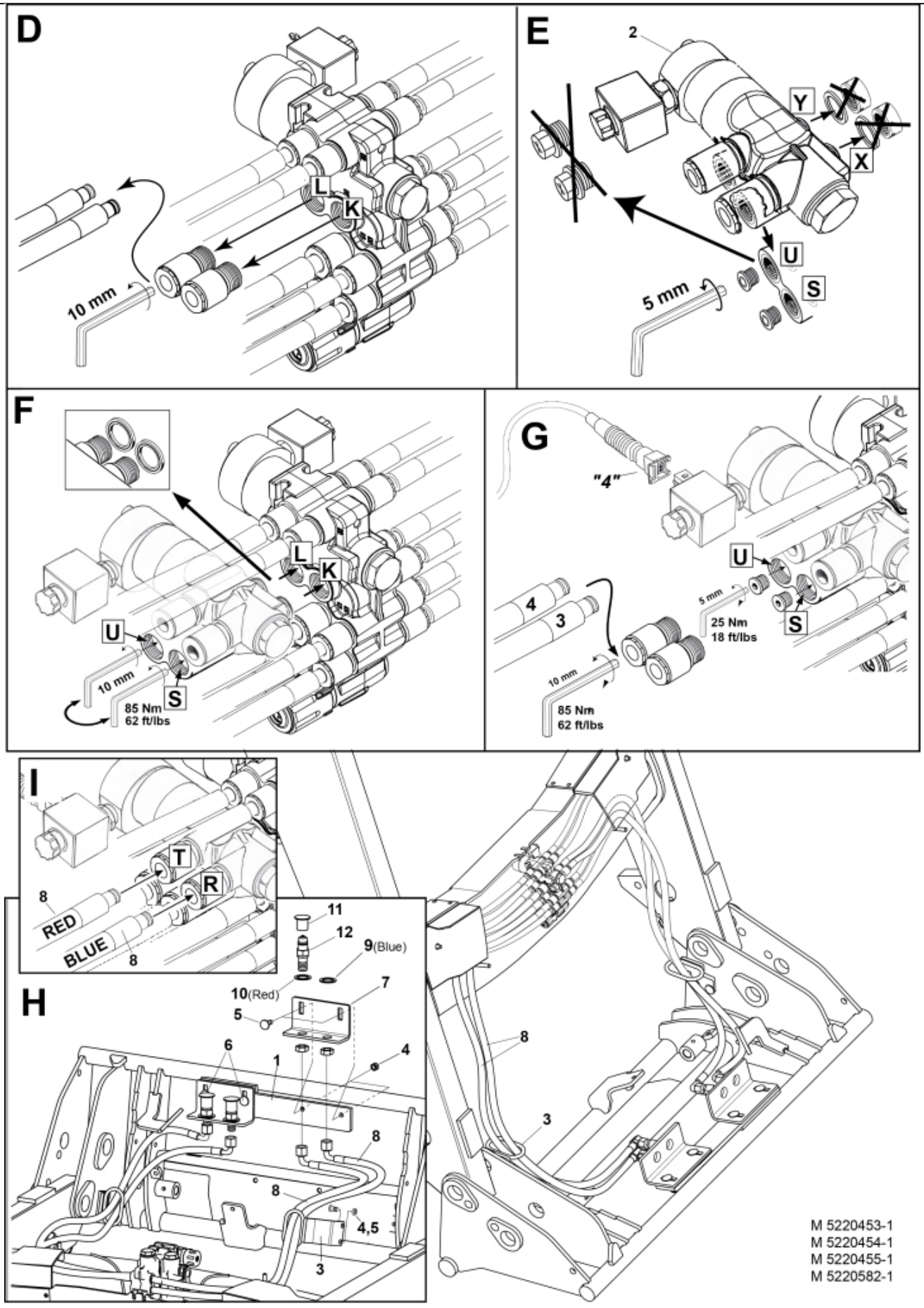
D
L
K
10 mm
E
2
Y
X
U
S
5 mm
F
L
K
U
10 mm
S
85 Nm
62 ft/lbs
G
"4"
U
4
3
5 mm
25 Nm
18 ft/lbs
S
10 mm
85 Nm
62 ft/lbs
I
T
R
8
RED
BLUE
8
H
11
12
9(Blue)
10(Red)
7
5
6
1
4
8
8
4,5
3
8
3
M 5220453-1
M 5220454-1
M 5220455-1
M 5220582-1

© 2025 Jost

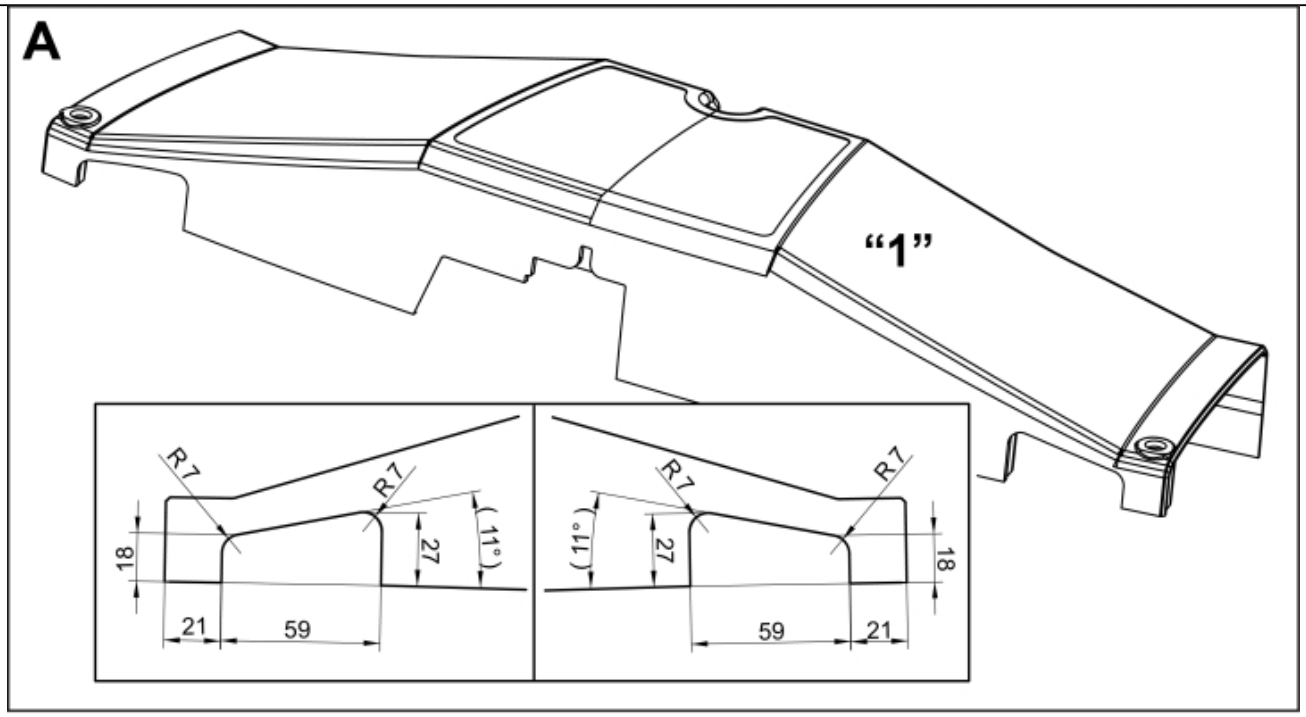

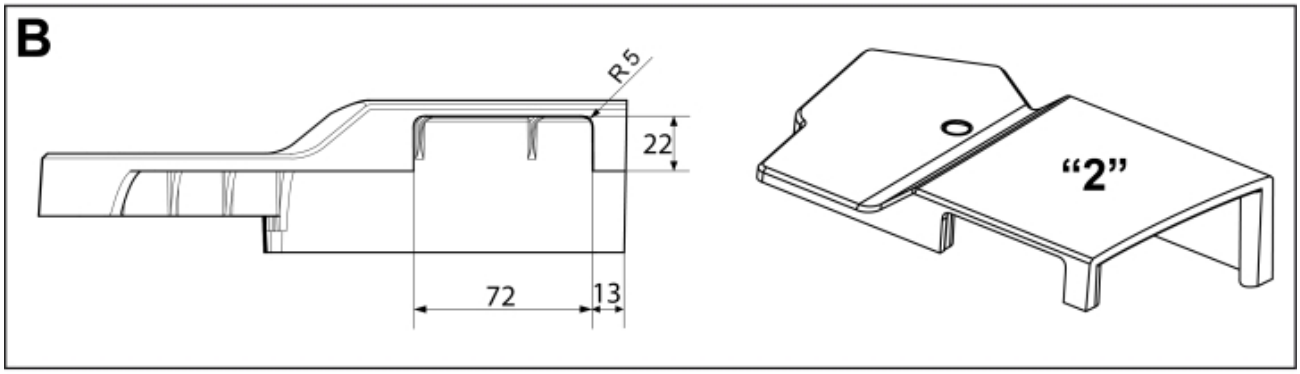

M 5220453-454-455-582-2

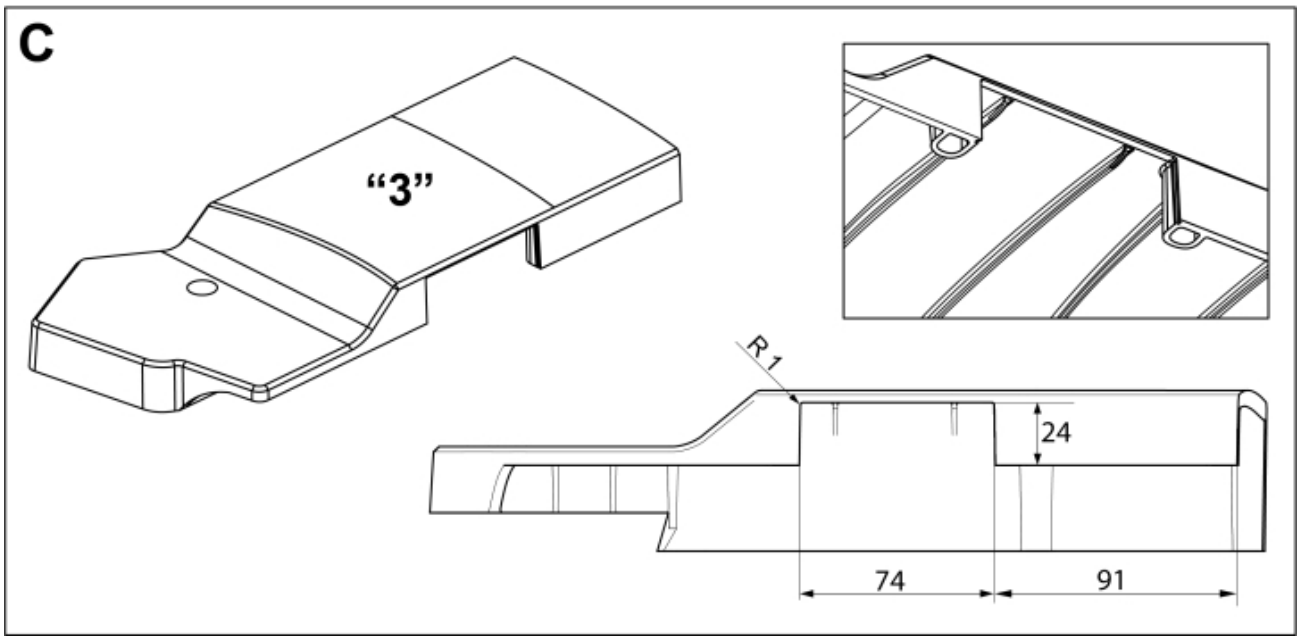

© 2025 Jost

Part assemblies	4th service
Specification	Specification: DS
	Serial number from: 7234200

PartNo	Pos	Qty	Name	Specifications
5220453		1 PCS	4th service	DS, 7234200
5219189	1	1 PCS	Bracket Extension	
10550260	2	1 PCS	Diverter valve	
5219183	3	1	Hose guide	
5011554	4	6	Nut	Loc-King M10
5006002	5	4	Screw	MVBF 10x30
5006003	6	2	Screw	MVBF 10x40
9031521		1 PCS	Hose kit	
5220303	7	1	Bracket	
9032613	8	2 PCS	Hose	3/8" L=1050mm (9031474)
5022159	9	1	Washer, blue	
5022157	10	1	Washer, red	
5044129	11	2	Dust Cover	1/2" Male
5044940	12	2	Coupling	ISO-A 1/2" Male - G3/8
5020936		1	Insert	3 switches

© 2025 Jost