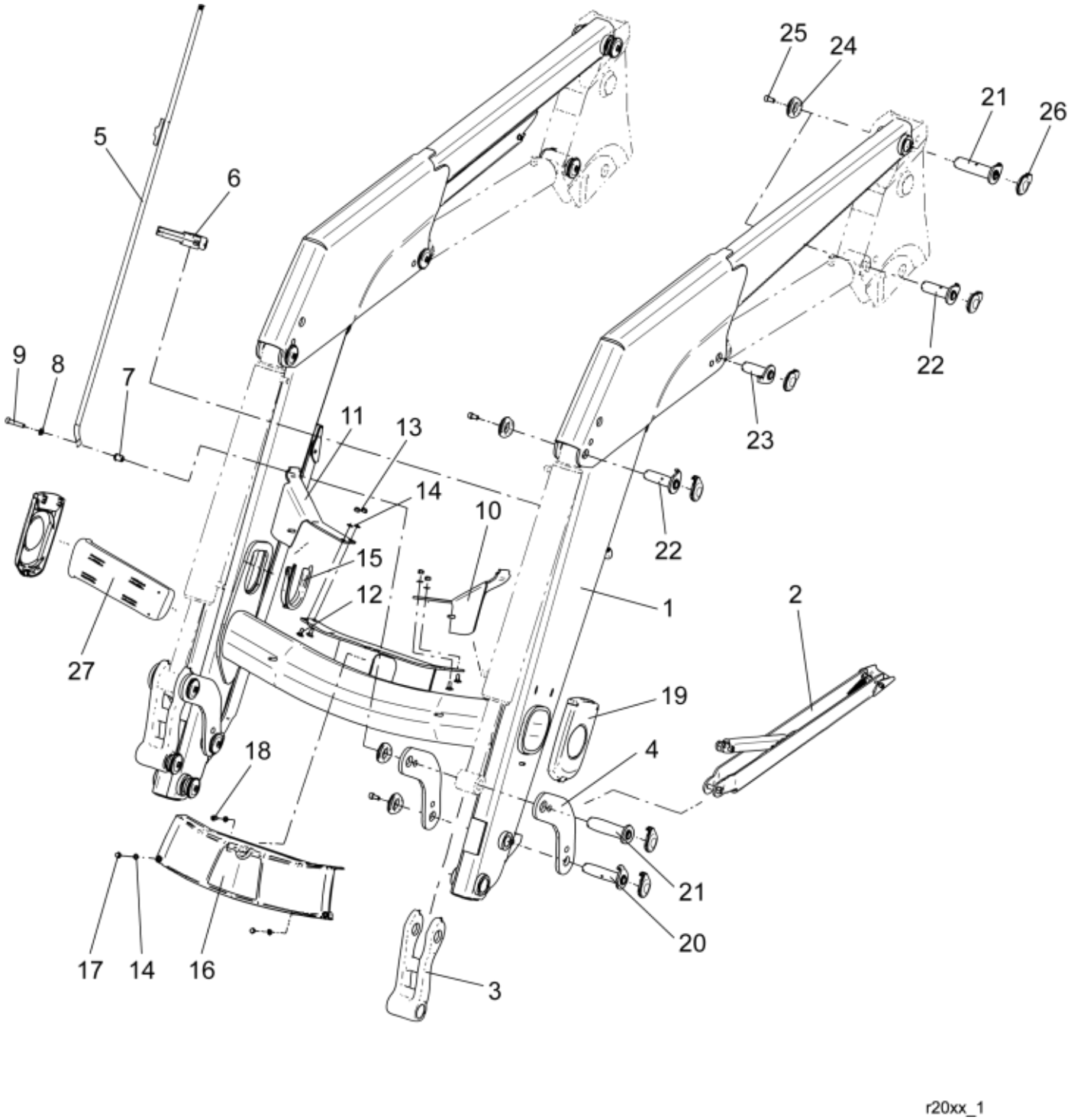

r20xx_1

© 2025 Jost

Part assemblies Loader beam

PartNo	Pos	Qty	Name	Specifications
5211784-7	1	1	Loader beam w. bushings	Grey
5218005-7	2	2	Support leg	Grey
60052807	3	2	Link w. bushings	Glossy Black
5214112-7	4	4	Link	Grey
5215216	5	1	Indicator rod	
5215209	6	1	Holder kit	
5215227	7	1	Spacer	
5013110	8	1	Washer	BRB 10.5x22x2
5050605	9	1	Screw	MC6S 10x50 Loc
5211255	10	1	Bracket	
5211256	11	1	Bracket	
5006001	12	4	Screw	MVBF 8x20
5011553	13	4	Nut	M6M M8 Loc-king
5013101	14	5	Washer	BRB 8,4 x 16
5215101	15	2	Cover	
5215021	16	1	Cover	
5011910	17	4	Nut	
5002058	18	1	Screw	M6S 8x16
5215192	19	2	Cover	
60018053	20	2	Pivot Pin	D=35, L=127mm
60018062	21	4	Pivot Pin	D=40, L=127mm
60018058	22	4	Pivot Pin	D=35, L=96mm
60018059	23	2	Pivot Pin	D=35, L84mm
5215131	24	16	Locking cover	
5050608	25	16	Screw	MC6S M10x20 Loc
5215121-1	26	16	Plastic cover	Glossy Black
5215182	27	1	Box	

© 2025 Jost