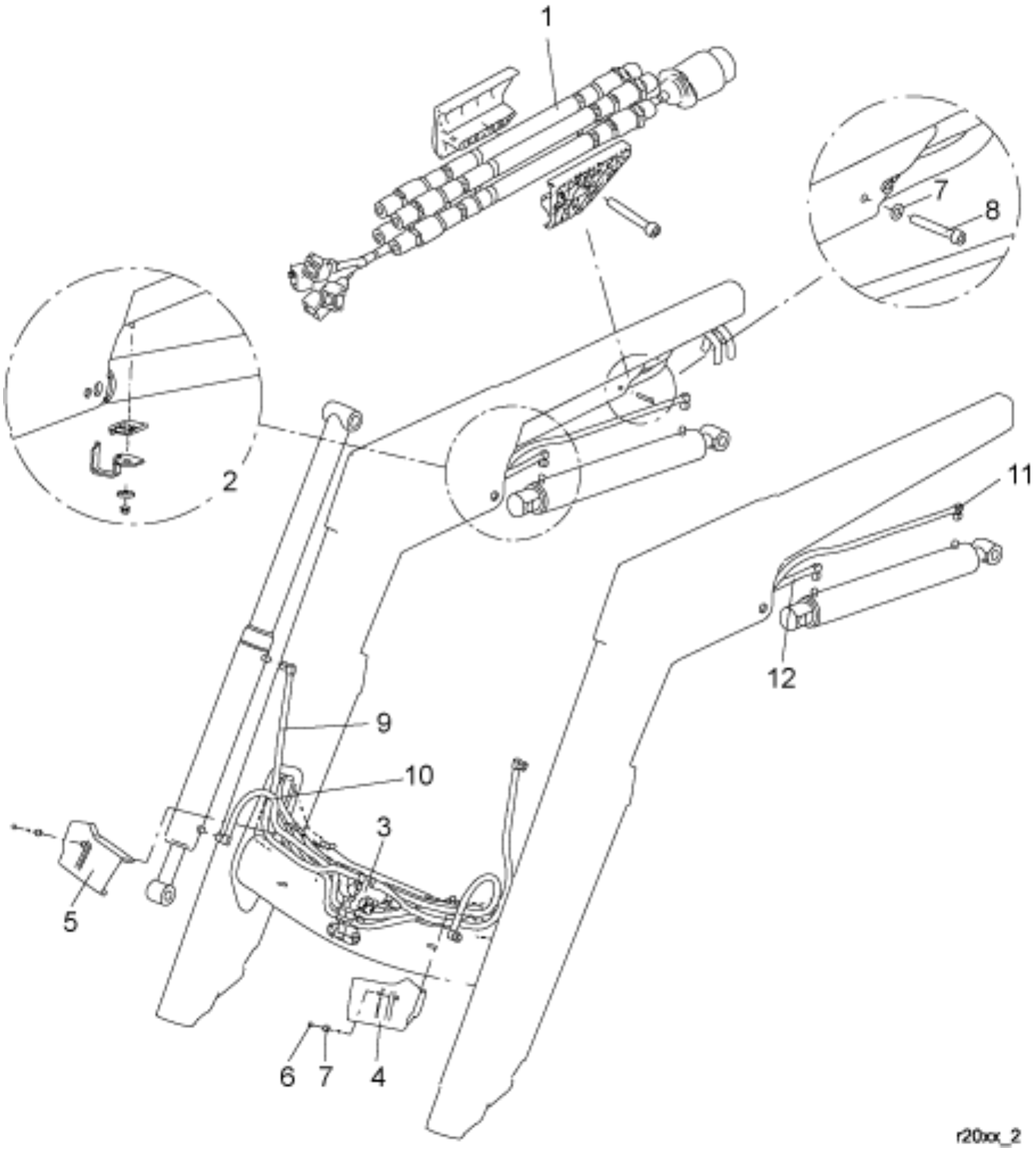

© 2025 Jost

Part assemblies Hydraulics

PartNo	Pos	Qty	Name	Specifications
9032556	1	1 PCS	Main hose kit	Replaces 9031314
5215167	2	1	Hose support	
10550258	3	1	Compact valve	7332743
5220601	4	1	Hose clamp LH	
5220603	5	1	Hose clamp RH	
5011910	6	2	Nut	
5013101	7	3	Washer	BRB 8,4 x 16
5005128	8	1	Screw	MC6S 8x60
9032630	9	2 PCS	Hose	3/8" L=1180mm (9031145)
9032602	10	2 PCS	Hose	3/8" L=830mm (9031141)
9032531	11	2 PCS	Hose	3/8" L=2630mm (9031134)
9032522	12	2 PCS	Hose	3/8" L=2060mm (9031124)

© 2025 Jost