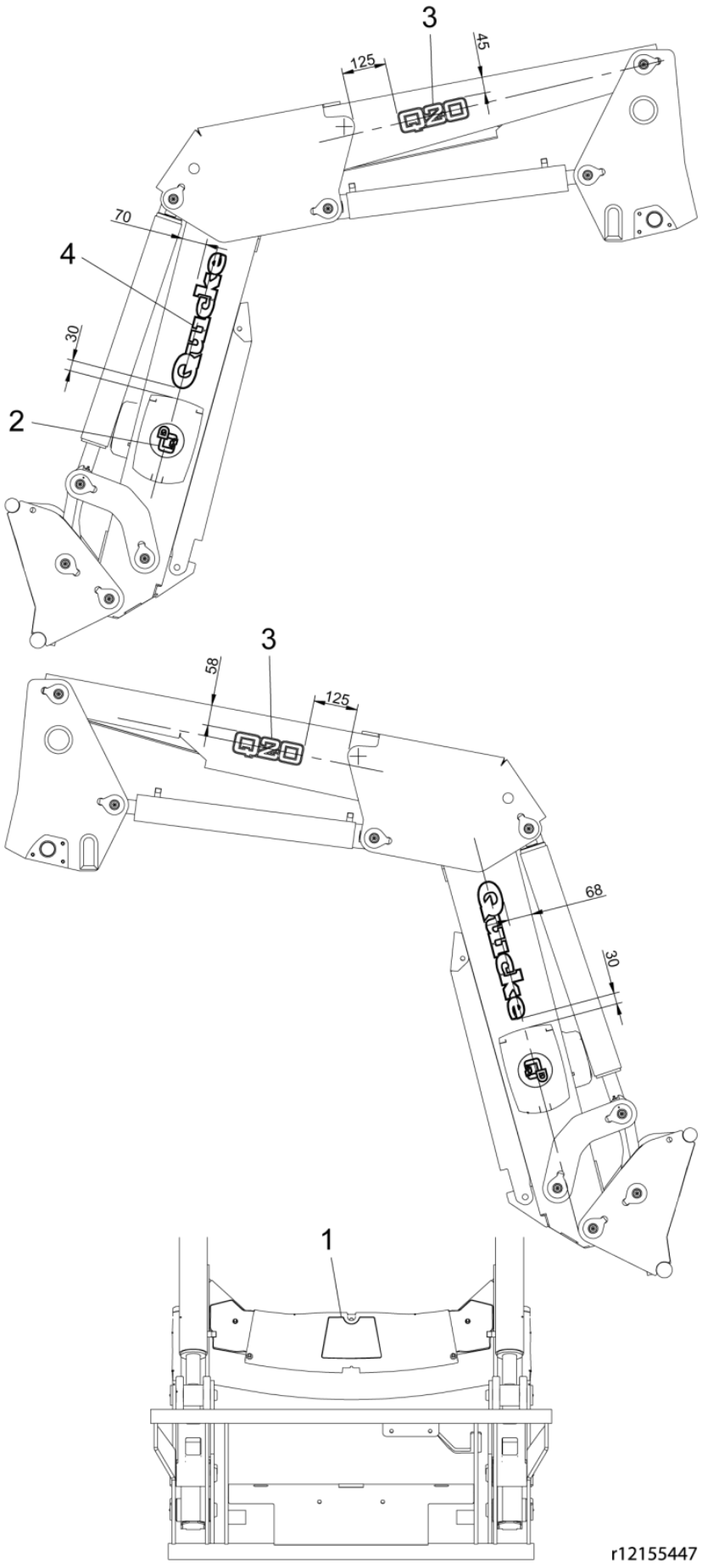

© 2025 Jost

Part assemblies Decal kit Q20 S/N - 7305476

PartNo	Pos	Qty	Name	Specifications
11133835	1	1 PCS	QD	
11133834	2	2 PCS	QD	
11133823	3	2 PCS	Q20	
11133822	4	2 PCS	Quicke	

© 2025 Jost