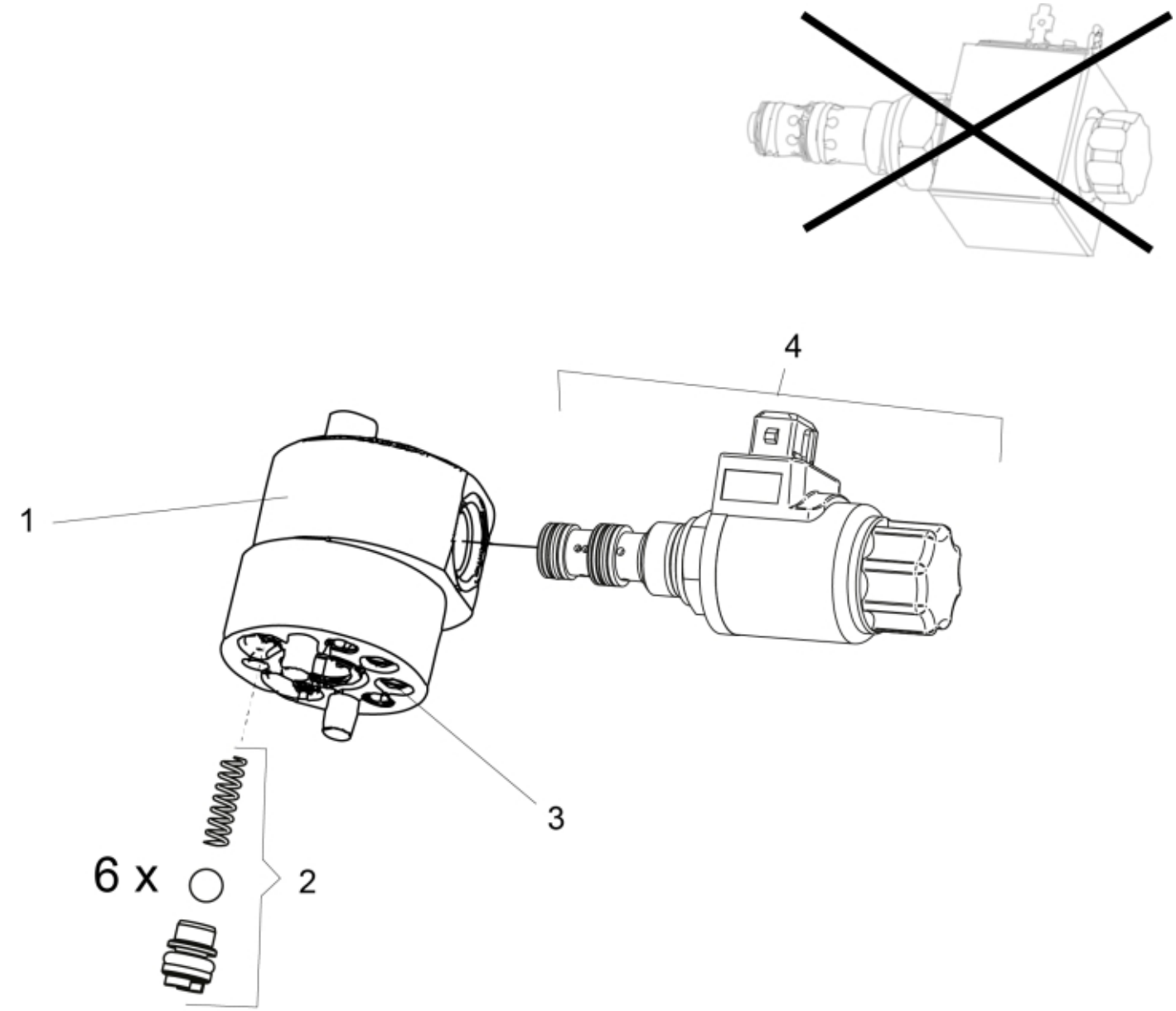

r10550265

© 2025 Jost

Part assemblies Servo block cpl.

PartNo	Pos	Qty	Name	Specifications
10550324	1	1 PCS	Servo block	
5034117	2	1 PCS	• Check valve cpl.	Kit, 6 pcs
5040040	3	1	• Seal kit	
10550323	4	1 PCS	Valve	

© 2025 Jost